CMSC 754 - Computational Geometry
Lecture 8 - Trapezoidal Maps

Trapezoidal Maps:

- Given a set $S = \{s_1, \ldots, s_n\}$ of line segments in $\mathbb{R}^2$, which we assume do not intersect (except at their endpts)
- General position: No duplicate x-coords + no vertical segments
- Enclose in large bounding rectangle
- Shoot a bullet path vertically above + below each endpt until it hits something

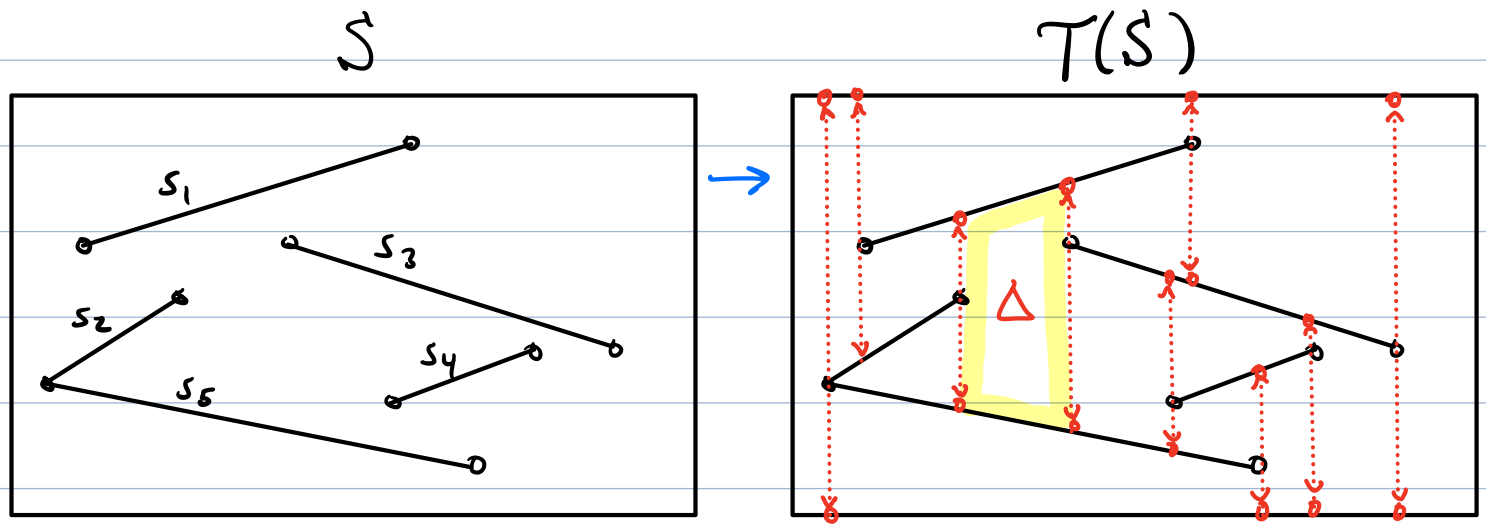

- This subdivides the rectangle into trapezoids (degenerating possibly to triangles)

Lemma: If $|S| = n$, $T(S)$ has $\leq 6n+4$ vertices and $\leq 3n+1$ trapezoids

Proof:

- Each segment contributes 6 vertices to $T(S)$

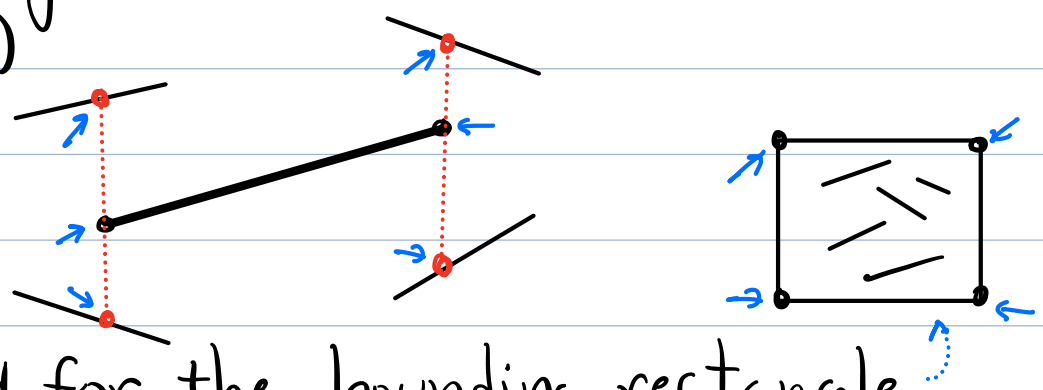

Plus 4 for the bounding rectangle

$\Rightarrow 6n+4$ vertices

- Charge each trapezoid to vertex on its left side. Each segment is charged 3 times

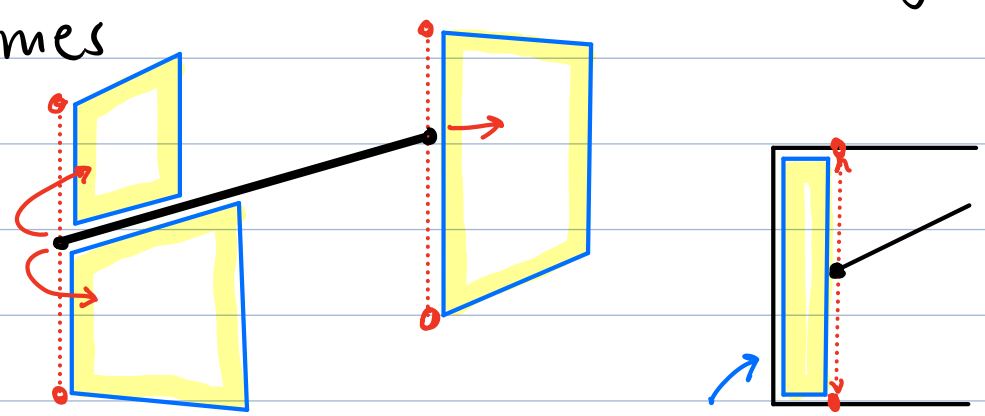

$\Rightarrow 3n + 1$ for leftmost trap.

$\square$

Obs: Each trapezoid owes its existence to ≤ 4 segments

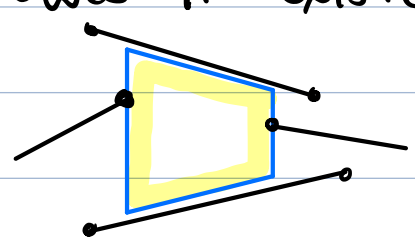

Construction:

- Plane sweep - $O(n \log n)$ [exercise]
- Randomized incremental - $O(n \log n)$ [this lect]

Incremental Construction:

Random order

- Add segments one-by-one
- Update the map after each insertion
- Two types of updates:
  - End pt of new segment
    - shoot bullet paths up + down
  - Crash through a vertical wall
    - trim the wall back

End point:

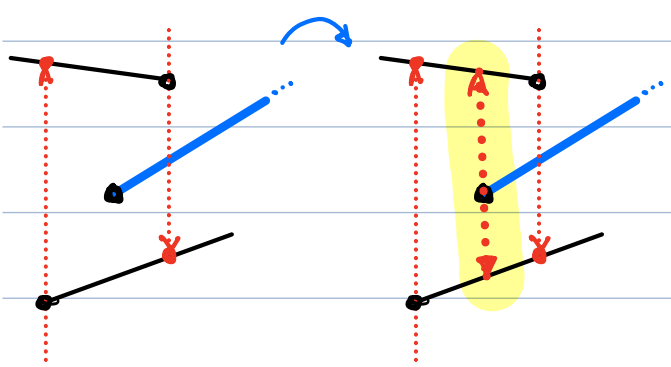

Find the trapezoid containing this end point, and add vertical segments to top + bottom

Crash through wall:

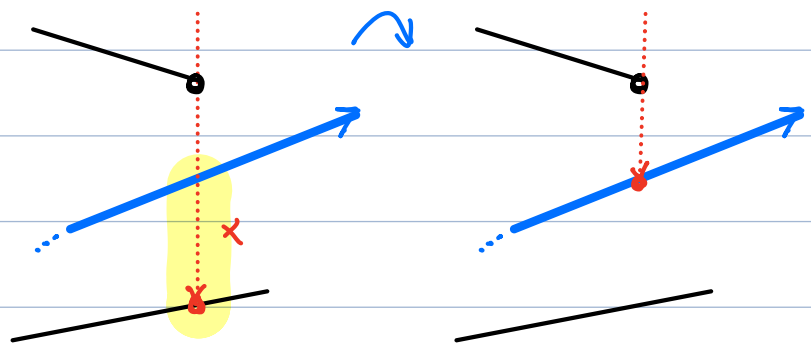

Determine whether the shooting vertex is above or below, and trim away the excess

These updates implicitly generate new trapezoids + destroy old ones

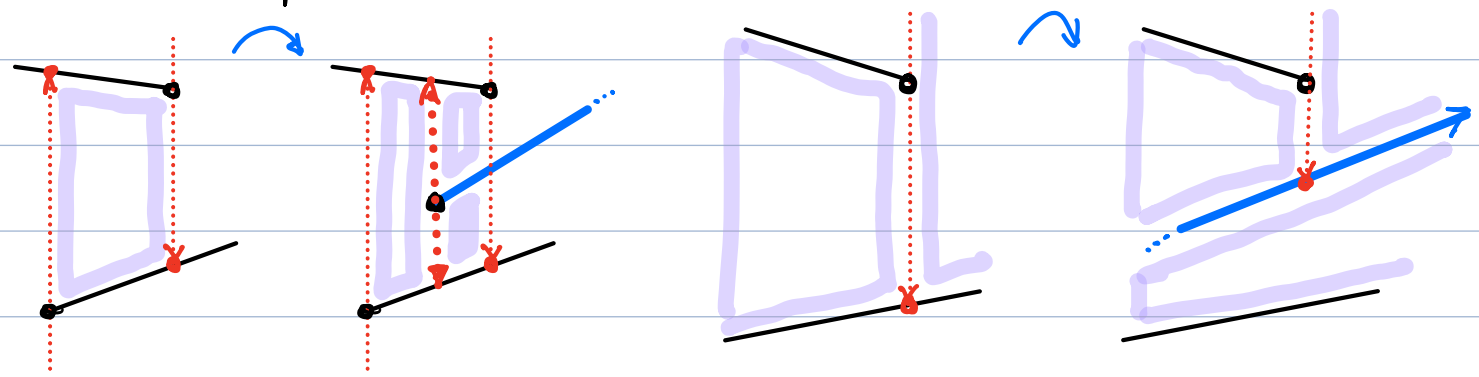

Running time: to insert segment s_i, $i = 1, \dots, n$

- **Find trapezoid** containing s_i's left endpt } $O(\log n)$ (next lect.)

- **Trace segment** through trapezoids + update } Depends! $O(1) \dots O(n)$

Lemma: For $1 \le i \le n$, let k_i denote the number of new trapezoids created by insertion of ith segment. Ignoring the time to locate the left endpt, the insert time is $O(k_i)$

(**Note:** k_i is a **random variable**, depending on insertion order $O(1) .. O(n)$)

Proof: Let w_i denote num. of walls hit.

$k_i = 4 + w_i$

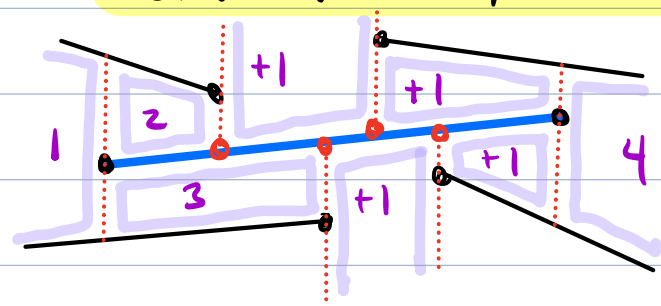

Insert time $\sim O(2 + 2 + w_i) = O(k_i)$

Bullets for left end pt

Bullets for right

Trim walls hit

$\square$

Overall run time: (Ignoring endpt location)

Worst-case: Adding segment i can create $O(i)$ new trapezoids

$$\Rightarrow W(n) = \sum_{i=1}^{n} i = O(n^2)$$

Expected-case: We will show that if segs are inserted in random order, $E(k_i) = O(1)$

Wow - This does not depend on i!

$$\Rightarrow \text{Exp. time} = \sum_{i=1}^{n} E(k_i) \leq n \cdot O(1) = O(n)$$

(ignoring left endpt location)

Lemma: Assuming segments are inserted in random order, $E(k_i)$ (the expected number of new trapezoids with i^{th} insert) is $O(1)$.

Proof: (Backwards analysis)

τ_i does not depend on insert order

- Let τ_i = trapezoidal map after $S_i = \{s_1, s_2, \ldots, s_i\}$
- Each seg. is equally likely to be last

$$\text{Prob}(s_i \text{ is last inserted}) = 1/i$$

- Given any trapezoid $\Delta \in \tau_i$ and any segment $s \in \{s_1, \ldots, s_n\}$ we say Δ depends on s if Δ would have been created if s was inserted last.

$$\delta(\Delta, s) = \begin{cases} 1 & \text{if } \Delta \text{ depends on } s \\ 0 & \text{o.w.} \end{cases}$$

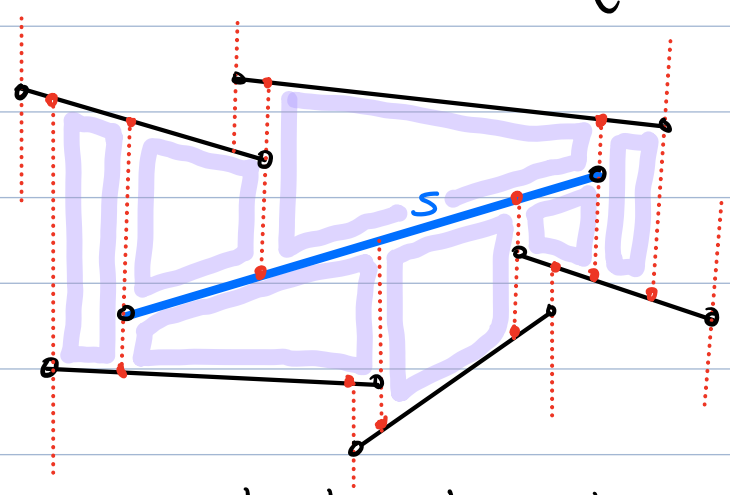

Trapezoids that depend on s

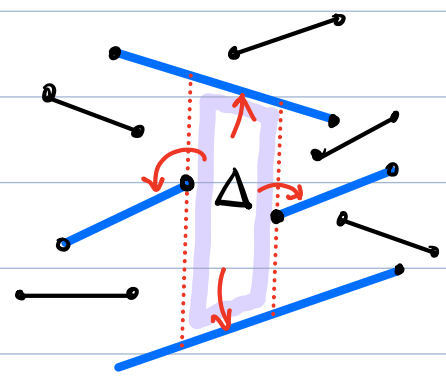

Segments on which Δ depends

Note: $\delta(\Delta, s)$ does not depend on insertion order

$$E(k_i) = \sum_{s \in S_i} \text{Prob}(s \text{ inserted last}) \cdot \left(\begin{array}{c}\text{Num. of traps} \\ \text{that depend on } s\end{array}\right)$$

$$= \sum_{s \in S_i} (1/i) \sum_{\Delta \in \tau_i} \delta(\Delta, s)$$

(Reverse sum. order)

$$= 1/i \sum_{s \in S_i} \sum_{\Delta \in \tau_i} \delta(\Delta, s)$$

$$= 1/i \sum_{\Delta \in \tau_i} \boxed{\sum_{s \in S_i} \delta(\Delta, s)}$$

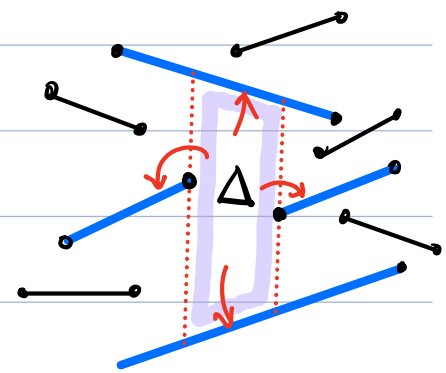

$$\leq 1/i \sum_{\Delta \in \tau_i} 4$$

Δ depends on at most 4 segs

$$= 4/i \cdot (\text{No. of trapezoids in } \tau_i)$$

$$\leq 4/i\,(3i+1) \quad \text{[By earlier lemma]}$$

$$= 12 + 4/i = O(1) \qquad \square$$

Summary:

- Shown that if segs. inserted in random order, total no. of updates $O(n)$
- Next: How to locate left endpts.