CS252
Graduate Computer Architecture
Lecture 6

Introduction to Advanced Pipelining: Out-Of-Order Pipelining

September 10, 1999

Prof. John Kubiatowicz

Review:
Exceptions and Compiler Scheduling

- Exceptional control flow comes in three flavors:
  - Exceptions - relevant to current process
  - Interrupts - caused by external events
  - Machine checks - Extreme situations
- Such exceptional flow can also be classified as synchronous or asynchronous
- Precise exceptions or interrupts break the control flow at a well defined instruction such that:
  - All logically prior instructions have completed and committed state
  - Neither the instruction or any following instructions have committed state
- Careful compiler scheduling can remove stalls and speed up code. Dependencies must be maintained.
- Loop unrolling and software pipelining can offer additional

Can we use HW to get CPI closer to 1?

- *Why in HW at run time?*
  - *Works when can't know real dependence at compile time*
  - *Compiler simpler*
  - *Code for one machine runs well on another*

- *Key idea: Allow instructions behind stall to proceed*

```
DIVD  F0,F2,F4
ADDD  F10,F0,F8
SUBD  F12,F8,F14
```

- *Out-of-order execution => out-of-order completion.*

Problems?

- **How do we prevent WAR and WAW hazards?**
- **How do we deal with variable latency?**
  - **Forwarding for RAW hazards harder.**

Instruction		Clock Cycle Number																
		1	2	3	4	5	6	7	8	9	10	11	12	13	14	15	16	17
LD	F6,34(R2)	IF	ID	EX	MEM	WB												
LD	F2,45(R3)		IF	ID	EX	MEM	WB											
MULTD	F0,F2,F4			IF	ID	stall	M1	M2	M3	M4	M5	M6	M7	M8	M9	M10	MEM	WB
SUBD	F8,F6,F2				IF	ID	A1	A2	MEM	WB								
DIVD	F10,F0,F6					IF	ID	stall	stall	stall	stall	stall	stall	stall	stall	stall	D1	D2
ADDD	F6,F8,F2						IF	ID	A1	A2	MEM	WB						

RAW

WAR

Scoreboard: a bookkeeping technique

- Out-of-order execution divides ID stage:
  1. Issue—decode instructions, check for structural hazards
  2. Read operands—wait until no data hazards, then read operands
- Scoreboards date to CDC6600 in 1963
- Instructions execute whenever not dependent on previous instructions and no hazards.
- CDC 6600: In order issue, out-of-order execution, out-of-order commit (or completion)
  - No forwarding!
  - Imprecise interrupt/exception model for now

Scoreboard Architecture (CDC 6600)

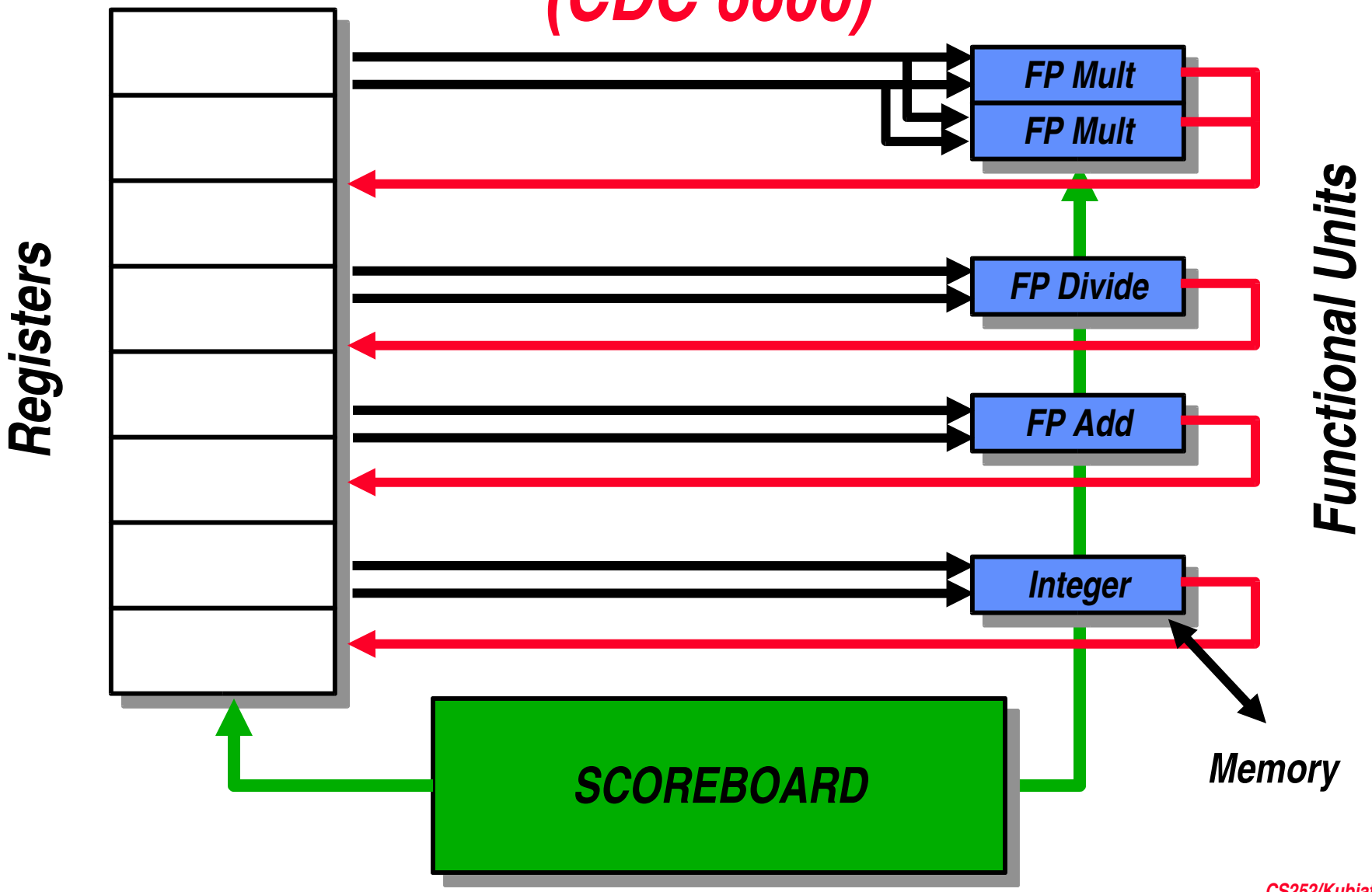

Scoreboard Implications

- Out-of-order completion => WAR, WAW hazards?
- Solutions for WAR:
  - Stall writeback until registers have been read
  - Read registers only during Read Operands stage
- Solution for WAW:
  - Detect hazard and stall issue of new instruction until other instruction completes
- No register renaming!
- Need to have multiple instructions in execution phase => multiple execution units or pipelined execution units
- Scoreboard keeps track of dependencies between instructions that have already issued.
- Scoreboard replaces ID, EX, WB with 4 stages

Four Stages of Scoreboard Control

- **Issue**—*decode instructions & check for structural hazards (ID1)*
  - *Instructions issued in program order (for hazard checking)*
  - *Don't issue if structural hazard*
  - *Don't issue if instruction is output dependent on any previously issued but uncompleted instruction (no WAW hazards)*
- **Read operands**—*wait until no data hazards, then read operands (ID2)*
  - *All real dependencies (RAW hazards) resolved in this stage, since we wait for instructions to write back data.*
  - *No forwarding of data in this model!*

Four Stages of Scoreboard Control

- **Execution**—*operate on operands (EX)*
  - *The functional unit begins execution upon receiving operands. When the result is ready, it notifies the scoreboard that it has completed execution.*
- **Write result**—*finish execution (WB)*
  - *Stall until no WAR hazards with previous instructions:*

Example:

```
DIVD   F0,F2,F4
ADDD   F10,F0,F8
SUBD   F8,F8,F14
```

CDC 6600 scoreboard would stall SUBD until ADDD reads operands

Three Parts of the Scoreboard

- **Instruction status:**
  Which of 4 steps the instruction is in

- **Functional unit status:**—Indicates the state of the functional unit (FU). 9 fields for each functional unit

  Busy: Indicates whether the unit is busy or not

  Op: Operation to perform in the unit (e.g., + or –)

  Fi: Destination register

  Fj,Fk: Source-register numbers

  Qj,Qk: Functional units producing source registers Fj, Fk

  Rj,Rk: Flags indicating when Fj, Fk are ready

- **Register result status**—Indicates which functional unit will write each register, if one exists. Blank when no pending instructions will write that register

Scoreboard Example

Instruction status:

Instruction		*j*	*k*	*Issue*	*Read Oper*	*Exec Comp*	*Write Result*
LD	F6	34+	R2				
LD	F2	45+	R3				
MULTD	F0	F2	F4				
SUBD	F8	F6	F2				
DIVD	F10	F0	F6				
ADDD	F6	F8	F2				

Functional unit status:

Time Name	*Busy*	*Op*	*dest Fi*	*S1 Fj*	*S2 Fk*	*FU Qj*	*FU Qk*	*Fj? Rj*	*Fk? Rk*
Integer	No								
Mult1	No								
Mult2	No								
Add	No								
Divide	No								

Register result status:

Clock	*F0*	*F2*	*F4*	*F6*	*F8*	*F10*	*F12*	...	*F30*
FU									

Detailed Scoreboard Pipeline Control

Instruction status	Wait until	Bookkeeping
Issue	Not busy (FU) and not result(D)	Busy(FU)← yes; Op(FU)← op; Fi(FU)← 'D'; Fj(FU)← 'S1'; Fk(FU)← 'S2'; Qj← Result('S1'); Qk← Result('S2'); Rj← not Qj; Rk← not Qk; Result('D')← FU;
Read operands	Rj and Rk	Rj← No; Rk← No
Execution complete	Functional unit done	
Write result	∀f((Fj(f)≠Fi(FU) or Rj(f)=No) & (Fk(f)≠Fi(FU) or Rk(f)=No))	∀f(if Qj(f)=FU then Rj(f)← Yes); ∀f(if Qk(f)=FU then Rj(f)← Yes); Result(Fi(FU))← 0; Busy(FU)← No

Scoreboard Example: Cycle 1

Instruction status:

Instruction		*j*	*k*	*Issue*	*Read Oper*	*Exec Comp*	*Write Result*
LD	F6	34+	R2				
LD	F2	45+	R3				
MULTD	F0	F2	F4				
SUBD	F8	F6	F2				
DIVD	F10	F0	F6				
ADDD	F6	F8	F2				

Functional unit status:

Time Name	*Busy*	*Op*	*dest Fi*	*S1 Fj*	*S2 Fk*	*FU Qj*	*FU Qk*	*Fj? Rj*	*Fk? Rk*
Integer	Yes	Load	F6		R2				Yes
Mult1	No								
Mult2	No								
Add	No								
Divide	No								

Register result status:

Clock **1**

	F0	*F2*	*F4*	*F6*	*F8*	*F10*	*F12*	...	*F30*
FU				Integer					

Scoreboard Example: Cycle 2

Instruction status:

Instruction		*j*	*k*	*Issue*	*Read Oper*	*Exec Comp*	*Write Result*
LD	F6	34+	R2	1	2		
LD	F2	45+	R3				
MULTD	F0	F2	F4				
SUBD	F8	F6	F2				
DIVD	F10	F0	F6				
ADDD	F6	F8	F2				

Functional unit status:

Time Name	*Busy*	*Op*	*dest Fi*	*S1 Fj*	*S2 Fk*	*FU Qj*	*FU Qk*	*Fj? Rj*	*Fk? Rk*
Integer	Yes	Load	F6		R2				Yes
Mult1	No								
Mult2	No								
Add	No								
Divide	No								

Register result status:

Clock		*F0*	*F2*	*F4*	*F6*	*F8*	*F10*	*F12*	...	*F30*
2	*FU*				Integer					

- **Issue 2nd LD?**

Scoreboard Example: Cycle 3

Instruction status:

Instruction		j	k	Issue	Read Oper	Exec Comp	Write Result
LD	F6	34+	R2	1	2	3	
LD	F2	45+	R3				
MULTD	F0	F2	F4				
SUBD	F8	F6	F2				
DIVD	F10	F0	F6				
ADDD	F6	F8	F2				

Functional unit status:

Time Name	Busy	Op	dest Fi	S1 Fj	S2 Fk	FU Qj	FU Qk	Fj? Rj	Fk? Rk
Integer	Yes	Load	F6		R2				No
Mult1	No								
Mult2	No								
Add	No								
Divide	No								

Register result status:

Clock		F0	F2	F4	F6	F8	F10	F12	...	F30
3	FU				Integer					

- **Issue MULT?**

Scoreboard Example: Cycle 4

Instruction status:

Instruction		*j*	*k*	*Issue*	*Read Oper*	*Exec Comp*	*Write Result*
LD	F6	34+	R2	1	2	3	4
LD	F2	45+	R3				
MULTD	F0	F2	F4				
SUBD	F8	F6	F2				
DIVD	F10	F0	F6				
ADDD	F6	F8	F2				

Functional unit status:

Time Name	*Busy*	*Op*	*dest Fi*	*S1 Fj*	*S2 Fk*	*FU Qj*	*FU Qk*	*Fj? Rj*	*Fk? Rk*
Integer	No								
Mult1	No								
Mult2	No								
Add	No								
Divide	No								

Register result status:

Clock		*F0*	*F2*	*F4*	*F6*	*F8*	*F10*	*F12*	...	*F30*
4	*FU*				Integer					

Scoreboard Example: Cycle 5

Instruction status:

Instruction		j	k	Issue	Read Oper	Exec Comp	Write Result
LD	F6	34+	R2	1	2	3	4
LD	F2	45+	R3	5			
MULTD	F0	F2	F4				
SUBD	F8	F6	F2				
DIVD	F10	F0	F6				
ADDD	F6	F8	F2				

Functional unit status:

Time Name	Busy	Op	dest Fi	S1 Fj	S2 Fk	FU Qj	FU Qk	Fj? Rj	Fk? Rk
Integer	Yes	Load	F2		R3				Yes
Mult1	No								
Mult2	No								
Add	No								
Divide	No								

Register result status:

Clock		F0	F2	F4	F6	F8	F10	F12	...	F30
5	FU		Integer							

Scoreboard Example: Cycle 6

Instruction status:

Instruction		*j*	*k*	*Issue*	*Read Oper*	*Exec Comp*	*Write Result*
LD	F6	34+	R2	1	2	3	4
LD	F2	45+	R3	5	6		
MULTD	F0	F2	F4	6			
SUBD	F8	F6	F2				
DIVD	F10	F0	F6				
ADDD	F6	F8	F2				

Functional unit status:

Time Name	*Busy*	*Op*	*dest Fi*	*S1 Fj*	*S2 Fk*	*FU Qj*	*FU Qk*	*Fj? Rj*	*Fk? Rk*
Integer	Yes	Load	F2		R3				Yes
Mult1	Yes	Mult	F0	F2	F4	Integer		No	Yes
Mult2	No								
Add	No								
Divide	No								

Register result status:

Clock		*F0*	*F2*	*F4*	*F6*	*F8*	*F10*	*F12*	...	*F30*
6	*FU*	Mult1	Integer							

Scoreboard Example: Cycle 7

Instruction status:

Instruction		j	k	Issue	Read Oper	Exec Comp	Write Result
LD	F6	34+	R2	1	2	3	4
LD	F2	45+	R3	5	6	7	
MULTD	F0	F2	F4	6			
SUBD	F8	F6	F2	7			
DIVD	F10	F0	F6				
ADDD	F6	F8	F2				

Functional unit status:

Time	Name	Busy	Op	dest Fi	S1 Fj	S2 Fk	FU Qj	FU Qk	Fj? Rj	Fk? Rk
	Integer	Yes	Load	F2		R3				No
	Mult1	Yes	Mult	F0	F2	F4	Integer		No	Yes
	Mult2	No								
	Add	Yes	Sub	F8	F6	F2		Integer	Yes	No
	Divide	No								

Register result status:

Clock		F0	F2	F4	F6	F8	F10	F12	...	F30
7	FU	Mult1	Integer			Add				

- **Read multiply operands?**

Scoreboard Example: Cycle 8a

(First half of clock cycle)

Instruction status:

Instruction		j	k	Issue	Read Oper	Exec Comp	Write Result
LD	F6	34+	R2	1	2	3	4
LD	F2	45+	R3	5	6	7	
MULTD	F0	F2	F4	6			
SUBD	F8	F6	F2	7			
DIVD	F10	F0	F6	8			
ADDD	F6	F8	F2				

Functional unit status:

Time	Name	Busy	Op	dest Fi	S1 Fj	S2 Fk	FU Qj	FU Qk	Fj? Rj	Fk? Rk
	Integer	Yes	Load	F2		R3				No
	Mult1	Yes	Mult	F0	F2	F4	Integer		No	Yes
	Mult2	No								
	Add	Yes	Sub	F8	F6	F2		Integer	Yes	No
	Divide	Yes	Div	F10	F0	F6	Mult1		No	Yes

Register result status:

Clock		F0	F2	F4	F6	F8	F10	F12	...	F30
8	FU	Mult1	Integer			Add	Divide			

Scoreboard Example: Cycle 8b

(Second half of clock cycle)

Instruction status:

Instruction		*j*	*k*	*Issue*	*Read Oper*	*Exec Comp*	*Write Result*
LD	F6	34+	R2	1	2	3	4
LD	F2	45+	R3	5	6	7	8
MULTD	F0	F2	F4	6			
SUBD	F8	F6	F2	7			
DIVD	F10	F0	F6	8			
ADDD	F6	F8	F2				

Functional unit status:

Time Name	*Busy*	*Op*	*dest Fi*	*S1 Fj*	*S2 Fk*	*FU Qj*	*FU Qk*	*Fj? Rj*	*Fk? Rk*
Integer	No								
Mult1	Yes	Mult	F0	F2	F4			Yes	Yes
Mult2	No								
Add	Yes	Sub	F8	F6	F2			Yes	Yes
Divide	Yes	Div	F10	F0	F6	Mult1		No	Yes

Register result status:

Clock		*F0*	*F2*	*F4*	*F6*	*F8*	*F10*	*F12*	...	*F30*
8	*FU*	Mult1				Add	Divide			

Scoreboard Example: Cycle 9

Instruction status:

Instruction		j	k	Issue	Read Oper	Exec Comp	Write Result
LD	F6	34+	R2	1	2	3	4
LD	F2	45+	R3	5	6	7	8
MULTD	F0	F2	F4	6	9		
SUBD	F8	F6	F2	7	9		
DIVD	F10	F0	F6	8			
ADDD	F6	F8	F2				

Functional unit status:

Note Remaining

Time	Name	Busy	Op	dest Fi	S1 Fj	S2 Fk	FU Qj	FU Qk	Fj? Rj	Fk? Rk
	Integer	No								
10	Mult1	Yes	Mult	F0	F2	F4			Yes	Yes
	Mult2	No								
2	Add	Yes	Sub	F8	F6	F2			Yes	Yes
	Divide	Yes	Div	F10	F0	F6	Mult1		No	Yes

Register result status:

Clock		F0	F2	F4	F6	F8	F10	F12	...	F30
9	FU	Mult1				Add	Divide			

- **Read operands for MULT & SUB? Issue ADDD?**

Scoreboard Example: Cycle 10

Instruction status:

Instruction		*j*	*k*	*Issue*	*Read Oper*	*Exec Comp*	*Write Result*
LD	F6	34+	R2	1	2	3	4
LD	F2	45+	R3	5	6	7	8
MULTD	F0	F2	F4	6	9		
SUBD	F8	F6	F2	7	9		
DIVD	F10	F0	F6	8			
ADDD	F6	F8	F2				

Functional unit status:

Time	*Name*	*Busy*	*Op*	*dest Fi*	*S1 Fj*	*S2 Fk*	*FU Qj*	*FU Qk*	*Fj? Rj*	*Fk? Rk*
	Integer	No								
9	Mult1	Yes	Mult	F0	F2	F4			No	No
	Mult2	No								
1	Add	Yes	Sub	F8	F6	F2			No	No
	Divide	Yes	Div	F10	F0	F6	Mult1		No	Yes

Register result status:

Clock		*F0*	*F2*	*F4*	*F6*	*F8*	*F10*	*F12*	...	*F30*
10	*FU*	Mult1				Add	Divide			

Scoreboard Example: Cycle 11

Instruction status:

Instruction		j	k	Issue	Read Oper	Exec Comp	Write Result
LD	F6	34+	R2	1	2	3	4
LD	F2	45+	R3	5	6	7	8
MULTD	F0	F2	F4	6	9		
SUBD	F8	F6	F2	7	9	11	
DIVD	F10	F0	F6	8			
ADDD	F6	F8	F2				

Functional unit status:

Time	Name	Busy	Op	dest Fi	S1 Fj	S2 Fk	FU Qj	FU Qk	Fj? Rj	Fk? Rk
	Integer	No								
8	Mult1	Yes	Mult	F0	F2	F4			No	No
	Mult2	No								
0	Add	Yes	Sub	F8	F6	F2			No	No
	Divide	Yes	Div	F10	F0	F6	Mult1		No	Yes

Register result status:

Clock		F0	F2	F4	F6	F8	F10	F12	...	F30
11	*FU*	Mult1				Add	Divide			

Scoreboard Example: Cycle 12

Instruction status:

Instruction		j	k	Issue	Read Oper	Exec Comp	Write Result
LD	F6	34+	R2	1	2	3	4
LD	F2	45+	R3	5	6	7	8
MULTD	F0	F2	F4	6	9		
SUBD	F8	F6	F2	7	9	11	12
DIVD	F10	F0	F6	8			
ADDD	F6	F8	F2				

Functional unit status:

Time	Name	Busy	Op	dest Fi	S1 Fj	S2 Fk	FU Qj	FU Qk	Fj? Rj	Fk? Rk
	Integer	No								
7	Mult1	Yes	Mult	F0	F2	F4			No	No
	Mult2	No								
	Add	No								
	Divide	Yes	Div	F10	F0	F6	Mult1		No	Yes

Register result status:

Clock		F0	F2	F4	F6	F8	F10	F12	...	F30
12	FU	Mult1					Divide			

- **Read operands for DIVD?**

Scoreboard Example: Cycle 13

Instruction status:

Instruction		j	k	Issue	Read Oper	Exec Comp	Write Result
LD	F6	34+	R2	1	2	3	4
LD	F2	45+	R3	5	6	7	8
MULTD	F0	F2	F4	6	9		
SUBD	F8	F6	F2	7	9	11	12
DIVD	F10	F0	F6	8			
ADDD	F6	F8	F2	13			

Functional unit status:

Time	Name	Busy	Op	dest Fi	S1 Fj	S2 Fk	FU Qj	FU Qk	Fj? Rj	Fk? Rk
	Integer	No								
6	Mult1	Yes	Mult	F0	F2	F4			No	No
	Mult2	No								
	Add	Yes	Add	F6	F8	F2			Yes	Yes
	Divide	Yes	Div	F10	F0	F6	Mult1		No	Yes

Register result status:

Clock		F0	F2	F4	F6	F8	F10	F12	...	F30
13	FU	Mult1			Add		Divide			

Scoreboard Example: Cycle 14

Instruction status:

Instruction		*j*	*k*	*Issue*	*Read Oper*	*Exec Comp*	*Write Result*
LD	F6	34+	R2	1	2	3	4
LD	F2	45+	R3	5	6	7	8
MULTD	F0	F2	F4	6	9		
SUBD	F8	F6	F2	7	9	11	12
DIVD	F10	F0	F6	8			
ADDD	F6	F8	F2	13	14		

Functional unit status:

Time	*Name*	*Busy*	*Op*	*dest Fi*	*S1 Fj*	*S2 Fk*	*FU Qj*	*FU Qk*	*Fj? Rj*	*Fk? Rk*
	Integer	No								
5	Mult1	Yes	Mult	F0	F2	F4			No	No
	Mult2	No								
2	Add	Yes	Add	F6	F8	F2			Yes	Yes
	Divide	Yes	Div	F10	F0	F6	Mult1		No	Yes

Register result status:

Clock		*F0*	*F2*	*F4*	*F6*	*F8*	*F10*	*F12*	...	*F30*
14	*FU*	Mult1			Add		Divide			

Scoreboard Example: Cycle 15

Instruction status:

Instruction		*j*	*k*	*Issue*	*Read Oper*	*Exec Comp*	*Write Result*
LD	F6	34+	R2	1	2	3	4
LD	F2	45+	R3	5	6	7	8
MULTD	F0	F2	F4	6	9		
SUBD	F8	F6	F2	7	9	11	12
DIVD	F10	F0	F6	8			
ADDD	F6	F8	F2	13	14		

Functional unit status:

Time	*Name*	*Busy*	*Op*	*dest Fi*	*S1 Fj*	*S2 Fk*	*FU Qj*	*FU Qk*	*Fj? Rj*	*Fk? Rk*
	Integer	No								
4	Mult1	Yes	Mult	F0	F2	F4			No	No
	Mult2	No								
1	Add	Yes	Add	F6	F8	F2			No	No
	Divide	Yes	Div	F10	F0	F6	Mult1		No	Yes

Register result status:

Clock		*F0*	*F2*	*F4*	*F6*	*F8*	*F10*	*F12*	...	*F30*
15	*FU*	Mult1			Add		Divide			

Scoreboard Example: Cycle 16

Instruction status:

Instruction		*j*	*k*	*Issue*	*Read Oper*	*Exec Comp*	*Write Result*
LD	F6	34+	R2	1	2	3	4
LD	F2	45+	R3	5	6	7	8
MULTD	F0	F2	F4	6	9		
SUBD	F8	F6	F2	7	9	11	12
DIVD	F10	F0	F6	8			
ADDD	F6	F8	F2	13	14	16	

Functional unit status:

Time	*Name*	*Busy*	*Op*	*dest Fi*	*S1 Fj*	*S2 Fk*	*FU Qj*	*FU Qk*	*Fj? Rj*	*Fk? Rk*
	Integer	No								
3	Mult1	Yes	Mult	F0	F2	F4			No	No
	Mult2	No								
0	Add	Yes	Add	F6	F8	F2			No	No
	Divide	Yes	Div	F10	F0	F6	Mult1		No	Yes

Register result status:

Clock		*F0*	*F2*	*F4*	*F6*	*F8*	*F10*	*F12*	...	*F30*
16	*FU*	Mult1			Add		Divide			

Scoreboard Example: Cycle 17

Instruction status:

Instruction		j	k	Issue	Read Oper	Exec Comp	Write Result
LD	F6	34+	R2	1	2	3	4
LD	F2	45+	R3	5	6	7	8
MULTD	F0	F2	F4	6	9		
SUBD	F8	F6	F2	7	9	11	12
DIVD	F10	F0	F6	8			
ADDD	F6	F8	F2	13	14	16	

WAR Hazard!

Functional unit status:

Time	Name	Busy	Op	dest Fi	S1 Fj	S2 Fk	FU Qj	FU Qk	Fj? Rj	Fk? Rk
	Integer	No								
2	Mult1	Yes	Mult	F0	F2	F4			No	No
	Mult2	No								
	Add	Yes	Add	F6	F8	F2			No	No
	Divide	Yes	Div	F10	F0	F6	Mult1		No	Yes

Register result status:

Clock		F0	F2	F4	F6	F8	F10	F12	...	F30
17	FU	Mult1			Add		Divide			

- **Why not write result of ADD???**

Scoreboard Example: Cycle 18

Instruction status:

Instruction		*j*	*k*	*Issue*	*Read Oper*	*Exec Comp*	*Write Result*
LD	F6	34+	R2	1	2	3	4
LD	F2	45+	R3	5	6	7	8
MULTD	F0	F2	F4	6	9		
SUBD	F8	F6	F2	7	9	11	12
DIVD	F10	F0	F6	8			
ADDD	F6	F8	F2	13	14	16	

Functional unit status:

Time	*Name*	*Busy*	*Op*	*dest Fi*	*S1 Fj*	*S2 Fk*	*FU Qj*	*FU Qk*	*Fj? Rj*	*Fk? Rk*
	Integer	No								
1	Mult1	Yes	Mult	F0	F2	F4			No	No
	Mult2	No								
	Add	Yes	Add	F6	F8	F2			No	No
	Divide	Yes	Div	F10	F0	F6	Mult1		No	Yes

Register result status:

Clock		*F0*	*F2*	*F4*	*F6*	*F8*	*F10*	*F12*	...	*F30*
18	*FU*	Mult1			Add		Divide			

Scoreboard Example: Cycle 19

Instruction status:

Instruction		*j*	*k*	*Issue*	*Read Oper*	*Exec Comp*	*Write Result*
LD	F6	34+	R2	1	2	3	4
LD	F2	45+	R3	5	6	7	8
MULTD	F0	F2	F4	6	9	19	
SUBD	F8	F6	F2	7	9	11	12
DIVD	F10	F0	F6	8			
ADDD	F6	F8	F2	13	14	16	

Functional unit status:

Time	*Name*	*Busy*	*Op*	*dest Fi*	*S1 Fj*	*S2 Fk*	*FU Qj*	*FU Qk*	*Fj? Rj*	*Fk? Rk*
	Integer	No								
0	Mult1	Yes	Mult	F0	F2	F4			No	No
	Mult2	No								
	Add	Yes	Add	F6	F8	F2			No	No
	Divide	Yes	Div	F10	F0	F6	Mult1		No	Yes

Register result status:

Clock		*F0*	*F2*	*F4*	*F6*	*F8*	*F10*	*F12*	...	*F30*
19	*FU*	Mult1			Add		Divide			

Scoreboard Example: Cycle 20

Instruction status:

Instruction		*j*	*k*	*Issue*	*Read Oper*	*Exec Comp*	*Write Result*
LD	F6	34+	R2	1	2	3	4
LD	F2	45+	R3	5	6	7	8
MULTD	F0	F2	F4	6	9	19	20
SUBD	F8	F6	F2	7	9	11	12
DIVD	F10	F0	F6	8			
ADDD	F6	F8	F2	13	14	16	

Functional unit status:

Time Name	*Busy*	*Op*	*dest Fi*	*S1 Fj*	*S2 Fk*	*FU Qj*	*FU Qk*	*Fj? Rj*	*Fk? Rk*
Integer	No								
Mult1	No								
Mult2	No								
Add	Yes	Add	F6	F8	F2			No	No
Divide	Yes	Div	F10	F0	F6			Yes	Yes

Register result status:

Clock		*F0*	*F2*	*F4*	*F6*	*F8*	*F10*	*F12*	...	*F30*
20	*FU*				Add		Divide			

Scoreboard Example: Cycle 21

Instruction status:

Instruction		*j*	*k*	*Issue*	*Read Oper*	*Exec Comp*	*Write Result*
LD	F6	34+	R2	1	2	3	4
LD	F2	45+	R3	5	6	7	8
MULTD	F0	F2	F4	6	9	19	20
SUBD	F8	F6	F2	7	9	11	12
DIVD	F10	F0	F6	8	21		
ADDD	F6	F8	F2	13	14	16	

Functional unit status:

Time Name	*Busy*	*Op*	*dest Fi*	*S1 Fj*	*S2 Fk*	*FU Qj*	*FU Qk*	*Fj? Rj*	*Fk? Rk*
Integer	No								
Mult1	No								
Mult2	No								
Add	Yes	Add	F6	F8	F2			No	No
Divide	Yes	Div	F10	F0	F6			Yes	Yes

Register result status:

Clock		*F0*	*F2*	*F4*	*F6*	*F8*	*F10*	*F12*	...	*F30*
21	*FU*				Add		Divide			

- ***WAR Hazard is now gone...***

Scoreboard Example: Cycle 22

Instruction status:

Instruction		j	k	Issue	Read Oper	Exec Comp	Write Result
LD	F6	34+	R2	1	2	3	4
LD	F2	45+	R3	5	6	7	8
MULTD	F0	F2	F4	6	9	19	20
SUBD	F8	F6	F2	7	9	11	12
DIVD	F10	F0	F6	8	21		
ADDD	F6	F8	F2	13	14	16	22

Functional unit status:

Time	Name	Busy	Op	dest Fi	S1 Fj	S2 Fk	FU Qj	FU Qk	Fj? Rj	Fk? Rk
	Integer	No								
	Mult1	No								
	Mult2	No								
	Add	No								
39	Divide	Yes	Div	F10	F0	F6			No	No

Register result status:

Clock		F0	F2	F4	F6	F8	F10	F12	...	F30
22	*FU*						Divide			

Faster than light computation (skip a couple of cycles)

Scoreboard Example: Cycle 61

Instruction status:

Instruction		*j*	*k*	*Issue*	*Read Oper*	*Exec Comp*	*Write Result*
LD	F6	34+	R2	1	2	3	4
LD	F2	45+	R3	5	6	7	8
MULTD	F0	F2	F4	6	9	19	20
SUBD	F8	F6	F2	7	9	11	12
DIVD	F10	F0	F6	8	21	61	
ADDD	F6	F8	F2	13	14	16	22

Functional unit status:

Time	*Name*	*Busy*	*Op*	*dest Fi*	*S1 Fj*	*S2 Fk*	*FU Qj*	*FU Qk*	*Fj? Rj*	*Fk? Rk*
	Integer	No								
	Mult1	No								
	Mult2	No								
	Add	No								
0	Divide	Yes	Div	F10	F0	F6			No	No

Register result status:

Clock		*F0*	*F2*	*F4*	*F6*	*F8*	*F10*	*F12*	...	*F30*
61	*FU*						Divide			

Scoreboard Example: Cycle 62

Instruction status:

Instruction		*j*	*k*	*Issue*	*Read Oper*	*Exec Comp*	*Write Result*
LD	F6	34+	R2	1	2	3	4
LD	F2	45+	R3	5	6	7	8
MULTD	F0	F2	F4	6	9	19	20
SUBD	F8	F6	F2	7	9	11	12
DIVD	F10	F0	F6	8	21	61	62
ADDD	F6	F8	F2	13	14	16	22

Functional unit status:

Time Name	*Busy*	*Op*	*dest Fi*	*S1 Fj*	*S2 Fk*	*FU Qj*	*FU Qk*	*Fj? Rj*	*Fk? Rk*
Integer	No								
Mult1	No								
Mult2	No								
Add	No								
Divide	No								

Register result status:

Clock		*F0*	*F2*	*F4*	*F6*	*F8*	*F10*	*F12*	...	*F30*
62	*FU*									

Review: Scoreboard Example: Cycle 62

Instruction status:

Instruction		j	k	Issue	Read Oper	Exec Comp	Write Result
LD	F6	34+	R2	1	2	3	4
LD	F2	45+	R3	5	6	7	8
MULTD	F0	F2	F4	6	9	19	20
SUBD	F8	F6	F2	7	9	11	12
DIVD	F10	F0	F6	8	21	61	62
ADDD	F6	F8	F2	13	14	16	22

Functional unit status:

Time Name	Busy	Op	dest Fi	S1 Fj	S2 Fk	FU Qj	FU Qk	Fj? Rj	Fk? Rk
Integer	No								
Mult1	No								
Mult2	No								
Add	No								
Divide	No								

Register result status:

Clock		F0	F2	F4	F6	F8	F10	F12	...	F30
62	FU									

- **In-order issue; out-of-order execute & commit**

CDC 6600 Scoreboard

- Speedup 1.7 from compiler; 2.5 by hand
  BUT slow memory (no cache) limits benefit
- Limitations of 6600 scoreboard:
  - No forwarding hardware
  - Limited to instructions in basic block (small window)
  - Small number of functional units (structural hazards), especially integer/load store units
  - Do not issue on structural hazards
  - Wait for WAR hazards
  - Prevent WAW hazards

CS 252 Administrivia

- *Check Class List and Telebears and make sure that you are (1) in the class and (2) officially registered.*

- *Textbook Reading for Lectures 6 to 8*
  - **Computer Architecture: A Quantitative Approach,** *Chapter 4, Appendix B*

- *Complete list of papers that I have handed out is now off the handouts page*
  - *I have indicated which papers are in the ISCA Retrospective*
  - *Extra copies on floor outside my door.*

Another Dynamic Algorithm: Tomasulo Algorithm

- For IBM 360/91 about 3 years after CDC 6600 (1966)
- Goal: High Performance without special compilers
- Differences between IBM 360 & CDC 6600 ISA
  - IBM has only 2 register specifiers/instr vs. 3 in CDC 6600
  - IBM has 4 FP registers vs. 8 in CDC 6600
  - IBM has memory-register ops
- Why Study? lead to Alpha 21264, HP 8000, MIPS 10000, Pentium II, PowerPC 604, …

Tomasulo Algorithm vs. Scoreboard

- Control & buffers distributed with Function Units (FU) vs. centralized in scoreboard;
  - FU buffers called "reservation stations"; have pending operands
- Registers in instructions replaced by values or pointers to reservation stations(RS); called register renaming ;
  - avoids WAR, WAW hazards
  - More reservation stations than registers, so can do optimizations compilers can't
- Results to FU from RS, not through registers, over Common Data Bus that broadcasts results to all FUs
- Load and Stores treated as FUs with RSs as well
- Integer instructions can go past branches, allowing

Tomasulo Organization

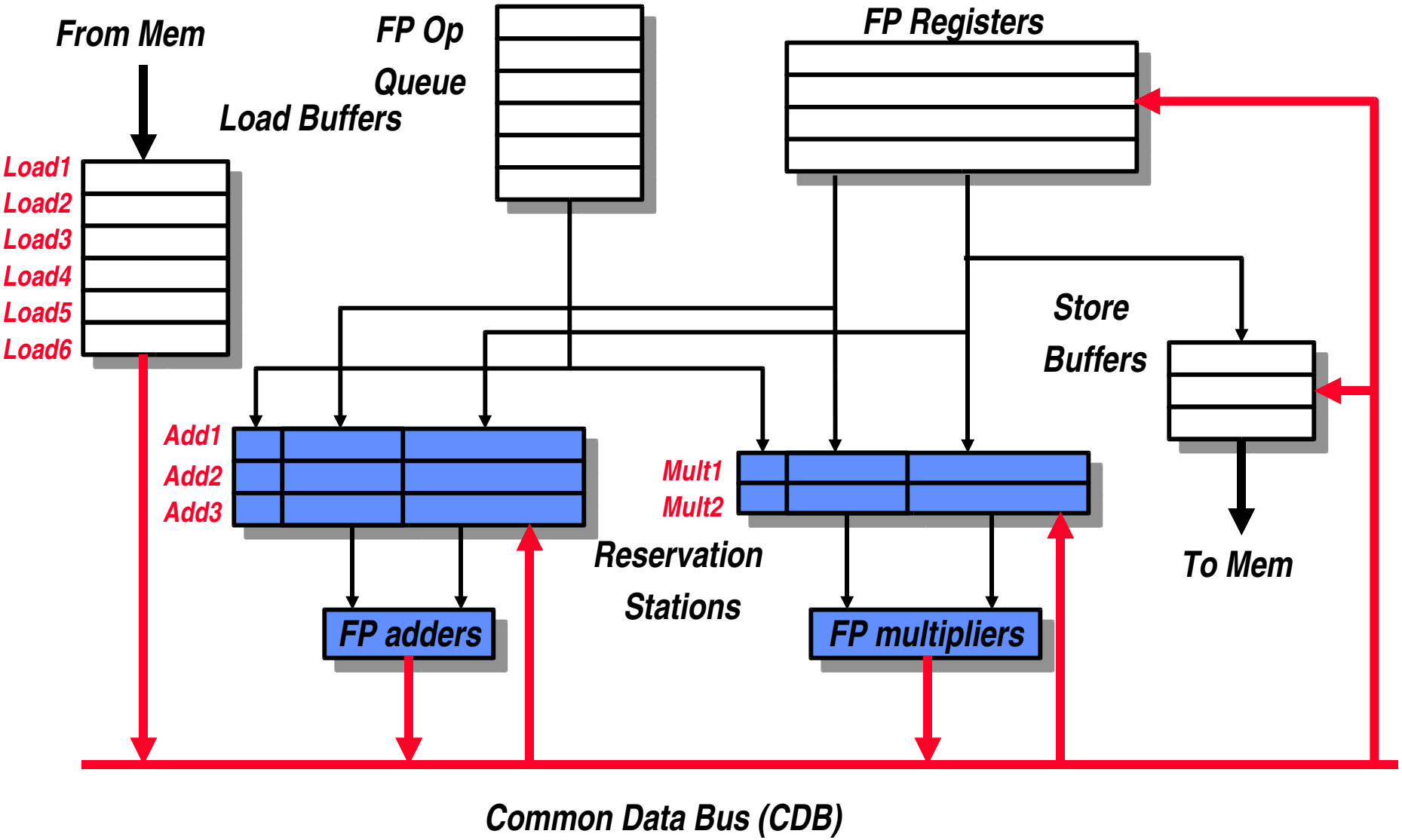

Reservation Station Components

Op: Operation to perform in the unit (e.g., + or –)

Vj, Vk: Value of Source operands

- Store buffers has V field, result to be stored

Qj, Qk: Reservation stations producing source registers (value to be written)

- Note: No ready flags as in Scoreboard; Qj,Qk=0 => ready
- Store buffers only have Qi for RS producing result

Busy: Indicates reservation station or FU is busy

Register result status—Indicates which functional unit will write each register, if one exists. Blank when no pending instructions that will write that register.

Three Stages of Tomasulo Algorithm

1. **Issue**—*get instruction from FP Op Queue*

   If reservation station free (no structural hazard),
   control issues instr & sends operands (renames registers).

2. **Execution**—*operate on operands (EX)*

   When both operands ready then execute;
   if not ready, watch Common Data Bus for result

3. **Write result**—*finish execution (WB)*

   Write on Common Data Bus to all awaiting units;
   mark reservation station available

- *Normal data bus: data + destination ("go to" bus)*
- *Common data bus: data + source ("come from" bus)*
  - *64 bits of data + 4 bits of Functional Unit source address*
  - *Write if matches expected Functional Unit (produces result)*

Tomasulo Example

Instruction status:

Instruction		*j*	*k*	*Issue*	*Exec Comp*	*Write Result*
LD	F6	34+	R2			
LD	F2	45+	R3			
MULTD	F0	F2	F4			
SUBD	F8	F6	F2			
DIVD	F10	F0	F6			
ADDD	F6	F8	F2			

	Busy	Address
Load1	No	
Load2	No	
Load3	No	

Reservation Stations:

Time	*Name*	*Busy*	*Op*	*S1 Vj*	*S2 Vk*	*RS Qj*	*RS Qk*
	Add1	No					
	Add2	No					
	Add3	No					
	Mult1	No					
	Mult2	No					

Register result status:

Clock		*F0*	*F2*	*F4*	*F6*	*F8*	*F10*	*F12*	...	*F30*
0	*FU*									

Tomasulo Example Cycle 1

Instruction status:

Instruction		*j*	*k*	*Issue*	*Exec Comp*	*Write Result*
LD	F6	34+	R2	1		
LD	F2	45+	R3			
MULTD	F0	F2	F4			
SUBD	F8	F6	F2			
DIVD	F10	F0	F6			
ADDD	F6	F8	F2			

	Busy	Address
Load1	Yes	34+R2
Load2	No	
Load3	No	

Reservation Stations:

Time	*Name*	*Busy*	*Op*	*S1 Vj*	*S2 Vk*	*RS Qj*	*RS Qk*
	Add1	No					
	Add2	No					
	Add3	No					
	Mult1	No					
	Mult2	No					

Register result status:

Clock		*F0*	*F2*	*F4*	*F6*	*F8*	*F10*	*F12*	...	*F30*
1	*FU*				Load1					

Tomasulo Example Cycle 2

Instruction status:

Instruction		*j*	*k*	*Issue*	*Exec Comp*	*Write Result*
LD	F6	34+	R2	1		
LD	F2	45+	R3	2		
MULTD	F0	F2	F4			
SUBD	F8	F6	F2			
DIVD	F10	F0	F6			
ADDD	F6	F8	F2			

	Busy	Address
Load1	Yes	34+R2
Load2	Yes	45+R3
Load3	No	

Reservation Stations:

Time	*Name*	*Busy*	*Op*	*S1 Vj*	*S2 Vk*	*RS Qj*	*RS Qk*
	Add1	No					
	Add2	No					
	Add3	No					
	Mult1	No					
	Mult2	No					

Register result status:

Clock		*F0*	*F2*	*F4*	*F6*	*F8*	*F10*	*F12*	...	*F30*
2	*FU*		Load2		Load1					

Note: Unlike 6600, can have multiple loads outstanding

Tomasulo Example Cycle 3

Instruction status:

Instruction		*j*	*k*	*Issue*	*Exec Comp*	*Write Result*
LD	F6	34+	R2	1	3	
LD	F2	45+	R3	2		
MULTD	F0	F2	F4	3		
SUBD	F8	F6	F2			
DIVD	F10	F0	F6			
ADDD	F6	F8	F2			

	Busy	Address
Load1	Yes	34+R2
Load2	Yes	45+R3
Load3	No	

Reservation Stations:

Time	*Name*	*Busy*	*Op*	*S1 Vj*	*S2 Vk*	*RS Qj*	*RS Qk*
	Add1	No					
	Add2	No					
	Add3	No					
	Mult1	Yes	MULTD		R(F4)	Load2	
	Mult2	No					

Register result status:

Clock		*F0*	*F2*	*F4*	*F6*	*F8*	*F10*	*F12*	...	*F30*
3	*FU*	Mult1	Load2		Load1					

- **Note: registers names are removed ("renamed") in Reservation Stations; MULT issued vs. scoreboard**
- **Load1 completing: what is waiting for Load1?**

Tomasulo Example Cycle 4

Instruction status:

Instruction		*j*	*k*	*Issue*	*Exec Comp*	*Write Result*
LD	F6	34+	R2	1	3	4
LD	F2	45+	R3	2	4	
MULTD	F0	F2	F4	3		
SUBD	F8	F6	F2	4		
DIVD	F10	F0	F6			
ADDD	F6	F8	F2			

	Busy	Address
Load1	No	
Load2	Yes	45+R3
Load3	No	

Reservation Stations:

Time	*Name*	*Busy*	*Op*	*S1 Vj*	*S2 Vk*	*RS Qj*	*RS Qk*
	Add1	Yes	SUBD	M(A1)			Load2
	Add2	No					
	Add3	No					
	Mult1	Yes	MULTD		R(F4)	Load2	
	Mult2	No					

Register result status:

Clock		*F0*	*F2*	*F4*	*F6*	*F8*	*F10*	*F12*	...	*F30*
4	*FU*	Mult1	Load2		M(A1)	Add1				

- ***Load2 completing; what is waiting for Load1?***

Tomasulo Example Cycle 5

Instruction status:

Instruction		*j*	*k*	*Issue*	*Exec Comp*	*Write Result*
LD	F6	34+	R2	1	3	4
LD	F2	45+	R3	2	4	5
MULTD	F0	F2	F4	3		
SUBD	F8	F6	F2	4		
DIVD	F10	F0	F6	5		
ADDD	F6	F8	F2			

	Busy	Address
Load1	No	
Load2	No	
Load3	No	

Reservation Stations:

Time	*Name*	*Busy*	*Op*	*S1 Vj*	*S2 Vk*	*RS Qj*	*RS Qk*
2	Add1	Yes	SUBD	M(A1)	M(A2)		
	Add2	No					
	Add3	No					
10	Mult1	Yes	MULTD	M(A2)	R(F4)		
	Mult2	Yes	DIVD		M(A1)	Mult1	

Register result status:

Clock **5**

	F0	*F2*	*F4*	*F6*	*F8*	*F10*	*F12*	...	*F30*
FU	Mult1	M(A2)		M(A1)	Add1	Mult2			

Tomasulo Example Cycle 6

Instruction status:

Instruction		*j*	*k*	*Issue*	*Exec Comp*	*Write Result*
LD	F6	34+	R2	1	3	4
LD	F2	45+	R3	2	4	5
MULTD	F0	F2	F4	3		
SUBD	F8	F6	F2	4		
DIVD	F10	F0	F6	5		
ADDD	F6	F8	F2	6		

	Busy	Address
Load1	No	
Load2	No	
Load3	No	

Reservation Stations:

Time	*Name*	*Busy*	*Op*	*S1 Vj*	*S2 Vk*	*RS Qj*	*RS Qk*
1	Add1	Yes	SUBD	M(A1)	M(A2)		
	Add2	Yes	ADDD		M(A2)	Add1	
	Add3	No					
9	Mult1	Yes	MULTD	M(A2)	R(F4)		
	Mult2	Yes	DIVD		M(A1)	Mult1	

Register result status:

Clock 6

	F0	*F2*	*F4*	*F6*	*F8*	*F10*	*F12*	...	*F30*
FU	Mult1	M(A2)		Add2	Add1	Mult2			

- ***Issue ADDD here vs. scoreboard?***

Tomasulo Example Cycle 7

Instruction status:

Instruction		*j*	*k*	*Issue*	*Exec Comp*	*Write Result*
LD	F6	34+	R2	1	3	4
LD	F2	45+	R3	2	4	5
MULTD	F0	F2	F4	3		
SUBD	F8	F6	F2	4	7	
DIVD	F10	F0	F6	5		
ADDD	F6	F8	F2	6		

	Busy	Address
Load1	No	
Load2	No	
Load3	No	

Reservation Stations:

Time	*Name*	*Busy*	*Op*	*S1 Vj*	*S2 Vk*	*RS Qj*	*RS Qk*
0	Add1	Yes	SUBD	M(A1)	M(A2)		
	Add2	Yes	ADDD		M(A2)	Add1	
	Add3	No					
8	Mult1	Yes	MULTD	M(A2)	R(F4)		
	Mult2	Yes	DIVD		M(A1)	Mult1	

Register result status:

Clock 7

	F0	*F2*	*F4*	*F6*	*F8*	*F10*	*F12*	...	*F30*
FU	Mult1	M(A2)		Add2	Add1	Mult2			

- ***Add1 completing; what is waiting for it?***

Tomasulo Example Cycle 8

Instruction status:

Instruction		*j*	*k*	*Issue*	*Exec Comp*	*Write Result*
LD	F6	34+	R2	1	3	4
LD	F2	45+	R3	2	4	5
MULTD	F0	F2	F4	3		
SUBD	F8	F6	F2	4	7	8
DIVD	F10	F0	F6	5		
ADDD	F6	F8	F2	6		

	Busy	Address
Load1	No	
Load2	No	
Load3	No	

Reservation Stations:

Time	*Name*	*Busy*	*Op*	*S1 Vj*	*S2 Vk*	*RS Qj*	*RS Qk*
	Add1	No					
2	Add2	Yes	ADDD	(M-M)	M(A2)		
	Add3	No					
7	Mult1	Yes	MULTD	M(A2)	R(F4)		
	Mult2	Yes	DIVD		M(A1)	Mult1	

Register result status:

Clock **8**

	F0	*F2*	*F4*	*F6*	*F8*	*F10*	*F12*	...	*F30*
FU	Mult1	M(A2)		Add2	(M-M)	Mult2			

Tomasulo Example Cycle 9

Instruction status:

Instruction		*j*	*k*	*Issue*	*Exec Comp*	*Write Result*
LD	F6	34+	R2	1	3	4
LD	F2	45+	R3	2	4	5
MULTD	F0	F2	F4	3		
SUBD	F8	F6	F2	4	7	8
DIVD	F10	F0	F6	5		
ADDD	F6	F8	F2	6		

	Busy	Address
Load1	No	
Load2	No	
Load3	No	

Reservation Stations:

Time	*Name*	*Busy*	*Op*	*S1 Vj*	*S2 Vk*	*RS Qj*	*RS Qk*
	Add1	No					
1	Add2	Yes	ADDD	(M-M)	M(A2)		
	Add3	No					
6	Mult1	Yes	MULTD	M(A2)	R(F4)		
	Mult2	Yes	DIVD		M(A1)	Mult1	

Register result status:

Clock 9

	F0	*F2*	*F4*	*F6*	*F8*	*F10*	*F12*	...	*F30*
FU	Mult1	M(A2)		Add2	(M-M)	Mult2			

Tomasulo Example Cycle 10

Instruction status:

Instruction		*j*	*k*	*Issue*	*Exec Comp*	*Write Result*
LD	F6	34+	R2	1	3	4
LD	F2	45+	R3	2	4	5
MULTD	F0	F2	F4	3		
SUBD	F8	F6	F2	4	7	8
DIVD	F10	F0	F6	5		
ADDD	F6	F8	F2	6	10	

	Busy	Address
Load1	No	
Load2	No	
Load3	No	

Reservation Stations:

Time	*Name*	*Busy*	*Op*	*S1 Vj*	*S2 Vk*	*RS Qj*	*RS Qk*
	Add1	No					
0	Add2	Yes	ADDD	(M-M)	M(A2)		
	Add3	No					
5	Mult1	Yes	MULTD	M(A2)	R(F4)		
	Mult2	Yes	DIVD		M(A1)	Mult1	

Register result status:

Clock		*F0*	*F2*	*F4*	*F6*	*F8*	*F10*	*F12*	...	*F30*
10	*FU*	Mult1	M(A2)		Add2	(M-M)	Mult2			

- ***Add2 completing; what is waiting for it?***

Tomasulo Example Cycle 11

Instruction status:

Instruction		*j*	*k*	*Issue*	*Exec Comp*	*Write Result*
LD	F6	34+	R2	1	3	4
LD	F2	45+	R3	2	4	5
MULTD	F0	F2	F4	3		
SUBD	F8	F6	F2	4	7	8
DIVD	F10	F0	F6	5		
ADDD	F6	F8	F2	6	10	11

	Busy	Address
Load1	No	
Load2	No	
Load3	No	

Reservation Stations:

Time	*Name*	*Busy*	*Op*	*S1 Vj*	*S2 Vk*	*RS Qj*	*RS Qk*
	Add1	No					
	Add2	No					
	Add3	No					
4	Mult1	Yes	MULTD	M(A2)	R(F4)		
	Mult2	Yes	DIVD		M(A1)	Mult1	

Register result status:

Clock **11**

	F0	*F2*	*F4*	*F6*	*F8*	*F10*	*F12*	...	*F30*
FU	Mult1	M(A2)		(M-M-(M-M)		Mult2			

- ***Write result of ADDD here vs. scoreboard?***
- ***All quick instructions complete in this cycle!***

Tomasulo Example Cycle 12

Instruction status:

Instruction		*j*	*k*	*Issue*	*Exec Comp*	*Write Result*
LD	F6	34+	R2	1	3	4
LD	F2	45+	R3	2	4	5
MULTD	F0	F2	F4	3		
SUBD	F8	F6	F2	4	7	8
DIVD	F10	F0	F6	5		
ADDD	F6	F8	F2	6	10	11

	Busy	Address
Load1	No	
Load2	No	
Load3	No	

Reservation Stations:

Time	*Name*	*Busy*	*Op*	*S1 Vj*	*S2 Vk*	*RS Qj*	*RS Qk*
	Add1	No					
	Add2	No					
	Add3	No					
3	Mult1	Yes	MULTD	M(A2)	R(F4)		
	Mult2	Yes	DIVD		M(A1)	Mult1	

Register result status:

Clock **12**

	F0	*F2*	*F4*	*F6*	*F8*	*F10*	*F12*	...	*F30*
FU	Mult1	M(A2)		(M-M-(M-M)		Mult2			

Tomasulo Example Cycle 13

Instruction status:

Instruction		*j*	*k*	*Issue*	*Exec Comp*	*Write Result*
LD	F6	34+	R2	1	3	4
LD	F2	45+	R3	2	4	5
MULTD	F0	F2	F4	3		
SUBD	F8	F6	F2	4	7	8
DIVD	F10	F0	F6	5		
ADDD	F6	F8	F2	6	10	11

	Busy	Address
Load1	No	
Load2	No	
Load3	No	

Reservation Stations:

Time	*Name*	*Busy*	*Op*	*S1 Vj*	*S2 Vk*	*RS Qj*	*RS Qk*
	Add1	No					
	Add2	No					
	Add3	No					
2	Mult1	Yes	MULTD	M(A2)	R(F4)		
	Mult2	Yes	DIVD		M(A1)	Mult1	

Register result status:

Clock **13**

	F0	*F2*	*F4*	*F6*	*F8*	*F10*	*F12*	...	*F30*
FU	Mult1	M(A2)		(M-M-(M-M)		Mult2			

Tomasulo Example Cycle 14

Instruction status:

Instruction		*j*	*k*	*Issue*	*Exec Comp*	*Write Result*
LD	F6	34+	R2	1	3	4
LD	F2	45+	R3	2	4	5
MULTD	F0	F2	F4	3		
SUBD	F8	F6	F2	4	7	8
DIVD	F10	F0	F6	5		
ADDD	F6	F8	F2	6	10	11

	Busy	Address
Load1	No	
Load2	No	
Load3	No	

Reservation Stations:

Time	*Name*	*Busy*	*Op*	*S1 Vj*	*S2 Vk*	*RS Qj*	*RS Qk*
	Add1	No					
	Add2	No					
	Add3	No					
1	Mult1	Yes	MULTD	M(A2)	R(F4)		
	Mult2	Yes	DIVD		M(A1)	Mult1	

Register result status:

Clock **14**

	F0	*F2*	*F4*	*F6*	*F8*	*F10*	*F12*	...	*F30*
FU	Mult1	M(A2)		(M-M-(M-M)		Mult2			

Tomasulo Example Cycle 15

Instruction status:

Instruction		*j*	*k*	*Issue*	*Exec Comp*	*Write Result*
LD	F6	34+	R2	1	3	4
LD	F2	45+	R3	2	4	5
MULTD	F0	F2	F4	3	15	
SUBD	F8	F6	F2	4	7	8
DIVD	F10	F0	F6	5		
ADDD	F6	F8	F2	6	10	11

	Busy	Address
Load1	No	
Load2	No	
Load3	No	

Reservation Stations:

Time	*Name*	*Busy*	*Op*	*S1 Vj*	*S2 Vk*	*RS Qj*	*RS Qk*
	Add1	No					
	Add2	No					
	Add3	No					
0	Mult1	Yes	MULTD	M(A2)	R(F4)		
	Mult2	Yes	DIVD		M(A1)	Mult1	

Register result status:

Clock **15**

	F0	*F2*	*F4*	*F6*	*F8*	*F10*	*F12*	...	*F30*
FU	Mult1	M(A2)		(M-M-(M-M)		Mult2			

Tomasulo Example Cycle 16

Instruction status:

Instruction		*j*	*k*	*Issue*	*Exec Comp*	*Write Result*
LD	F6	34+	R2	1	3	4
LD	F2	45+	R3	2	4	5
MULTD	F0	F2	F4	3	15	16
SUBD	F8	F6	F2	4	7	8
DIVD	F10	F0	F6	5		
ADDD	F6	F8	F2	6	10	11

	Busy	Address
Load1	No	
Load2	No	
Load3	No	

Reservation Stations:

Time	*Name*	*Busy*	*Op*	*S1 Vj*	*S2 Vk*	*RS Qj*	*RS Qk*
	Add1	No					
	Add2	No					
	Add3	No					
	Mult1	No					
40	Mult2	Yes	DIVD	M*F4	M(A1)		

Register result status:

Clock		*F0*	*F2*	*F4*	*F6*	*F8*	*F10*	*F12*	...	*F30*
16	*FU*	M*F4	M(A2)		(M-M-(M-M)		Mult2			

Faster than light computation (skip a couple of cycles)

Tomasulo Example Cycle 55

Instruction status:

Instruction		*j*	*k*	*Issue*	*Exec Comp*	*Write Result*
LD	F6	34+	R2	1	3	4
LD	F2	45+	R3	2	4	5
MULTD	F0	F2	F4	3	15	16
SUBD	F8	F6	F2	4	7	8
DIVD	F10	F0	F6	5		
ADDD	F6	F8	F2	6	10	11

	Busy	Address
Load1	No	
Load2	No	
Load3	No	

Reservation Stations:

Time	*Name*	*Busy*	*Op*	*S1 Vj*	*S2 Vk*	*RS Qj*	*RS Qk*
	Add1	No					
	Add2	No					
	Add3	No					
	Mult1	No					
1	Mult2	Yes	DIVD	M*F4	M(A1)		

Register result status:

Clock		*F0*	*F2*	*F4*	*F6*	*F8*	*F10*	*F12*	...	*F30*
55	*FU*	M*F4	M(A2)		(M-M-(M-M)		Mult2			

Tomasulo Example Cycle 56

Instruction status:

Instruction		*j*	*k*	*Issue*	*Exec Comp*	*Write Result*
LD	F6	34+	R2	1	3	4
LD	F2	45+	R3	2	4	5
MULTD	F0	F2	F4	3	15	16
SUBD	F8	F6	F2	4	7	8
DIVD	F10	F0	F6	5	56	
ADDD	F6	F8	F2	6	10	11

	Busy	Address
Load1	No	
Load2	No	
Load3	No	

Reservation Stations:

Time	*Name*	*Busy*	*Op*	*S1 Vj*	*S2 Vk*	*RS Qj*	*RS Qk*
	Add1	No					
	Add2	No					
	Add3	No					
	Mult1	No					
0	Mult2	Yes	DIVD	M*F4	M(A1)		

Register result status:

Clock		*F0*	*F2*	*F4*	*F6*	*F8*	*F10*	*F12*	...	*F30*
56	*FU*	M*F4	M(A2)		(M-M-(M-M)		Mult2			

- ***Mult2 is completing; what is waiting for it?***

Tomasulo Example Cycle 57

Instruction status:

Instruction		j	k	Issue	Exec Comp	Write Result
LD	F6	34+	R2	1	3	4
LD	F2	45+	R3	2	4	5
MULTD	F0	F2	F4	3	15	16
SUBD	F8	F6	F2	4	7	8
DIVD	F10	F0	F6	5	56	57
ADDD	F6	F8	F2	6	10	11

	Busy	Address
Load1	No	
Load2	No	
Load3	No	

Reservation Stations:

Time	Name	Busy	Op	S1 Vj	S2 Vk	RS Qj	RS Qk
	Add1	No					
	Add2	No					
	Add3	No					
	Mult1	No					
	Mult2	Yes	DIVD	M*F4	M(A1)		

Register result status:

Clock 56

	F0	F2	F4	F6	F8	F10	F12	...	F30
FU	M*F4	M(A2)		(M-M-(M-M)Result					

- **Once again: In-order issue, out-of-order execution and completion.**

Compare to Scoreboard Cycle 62

Instruction status:

Instruction		*j*	*k*	*Issue*	*Read Oper*	*Exec Comp*	*Write Result*		*Issue*	*Exec Comp*	*Write Result*
LD	F6	34+	R2	1	2	3	4		1	3	4
LD	F2	45+	R3	5	6	7	8		2	4	5
MULTD	F0	F2	F4	6	9	19	20		3	15	16
SUBD	F8	F6	F2	7	9	11	12		4	7	8
DIVD	F10	F0	F6	8	21	61	62		5	56	57
ADDD	F6	F8	F2	13	14	16	22		6	10	11

- **Why take longer on scoreboard/6600?**
  - **Structural Hazards**
  - **Lack of forwarding**

Tomasulo v. Scoreboard (IBM 360/91 v. CDC 6600)

Pipelined Functional Units	Multiple Functional Units
(6 load, 3 store, 3 +, 2 x/÷)	(1 load/store, 1 + , 2 x, 1 ÷)
window size: ≤ 14 instructions	≤ 5 instructions
No issue on structural hazard	same
WAR: renaming avoids	stall completion
WAW: renaming avoids	stall issue
Broadcast results from FU	Write/read registers
Control: reservation stations	central scoreboard

Tomasulo Drawbacks

- Complexity
  - delays of 360/91, MIPS 10000, IBM 620?
- Many associative stores (CDB) at high speed
- Performance limited by Common Data Bus
  - Multiple CDBs => more FU logic for parallel assoc stores

Summary #1

- *HW exploiting ILP*
  - *Works when can't know dependence at compile time.*
  - *Code for one machine runs well on another*

- *Key idea of Scoreboard: Allow instructions behind stall to proceed (Decode => Issue instr & read operands)*
  - *Enables out-of-order execution => out-of-order completion*
  - *ID stage checked both for structural & data dependencies*
  - *Original version didn't handle forwarding.*
  - *No automatic register renaming*

Summary #2

- Reservations stations: renaming to larger set of registers + buffering source operands
  - Prevents registers as bottleneck
  - Avoids WAR, WAW hazards of Scoreboard
  - Allows loop unrolling in HW
- Not limited to basic blocks (integer units gets ahead, beyond branches)
- Helps cache misses as well
- Lasting Contributions
  - Dynamic scheduling
  - Register renaming
  - Load/store disambiguation
- 360/91 descendants are Pentium II; PowerPC 604; MIPS R10000; HP PA 8000; Alpha 21264