CMSC 330: Organization of Programming Languages

DFAs, and NFAs, and Regexps

Types of Finite Automata

- Deterministic Finite Automata (DFA)
  - Exactly one sequence of steps for each string
  - All examples so far

- Nondeterministic Finite Automata (NFA)
  - May have many sequences of steps for each string
  - Accepts if any path ends in final state at end of string
  - More compact than DFA
    - But more expensive to test whether a string matches

Comparing DFAs and NFAs

- NFAs can have more than one transition leaving a state on the same symbol

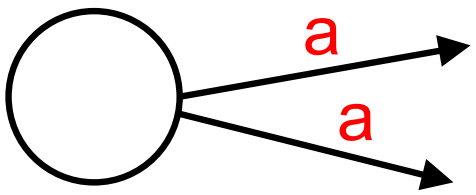

- DFAs allow only one transition per symbol
  - I.e., transition function must be a valid function
  - DFA is a special case of NFA

Comparing DFAs and NFAs (cont.)

- NFAs may have transitions with empty string label
  - May move to new state without consuming character

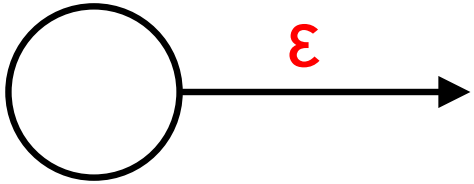

ε-transition

- DFA transition must be labeled with symbol
  - DFA is a special case of NFA

DFA for (a|b)*abb

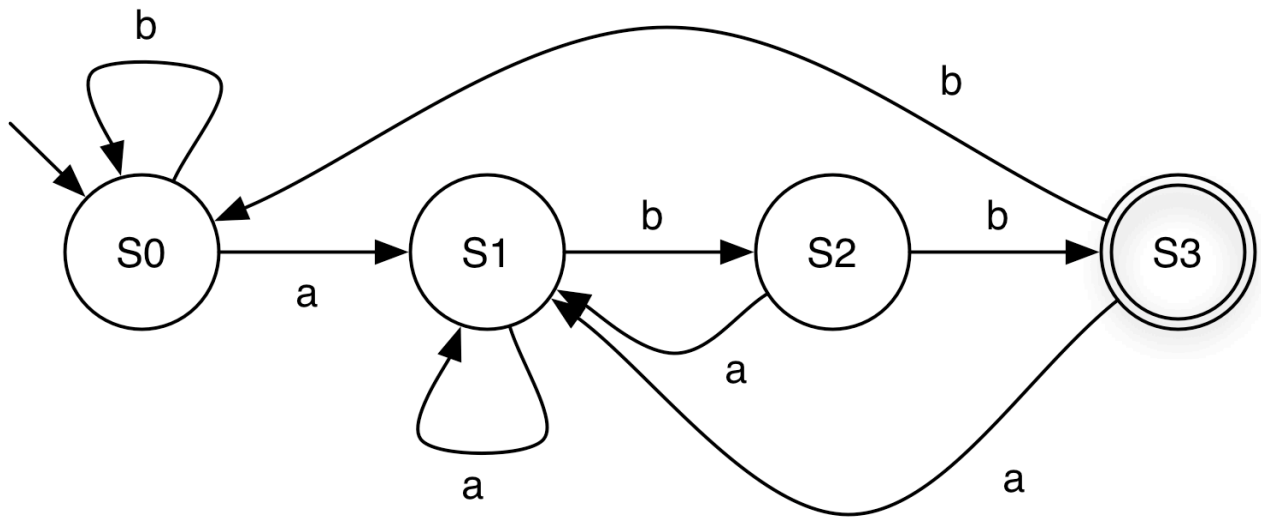

NFA for (a|b)*abb

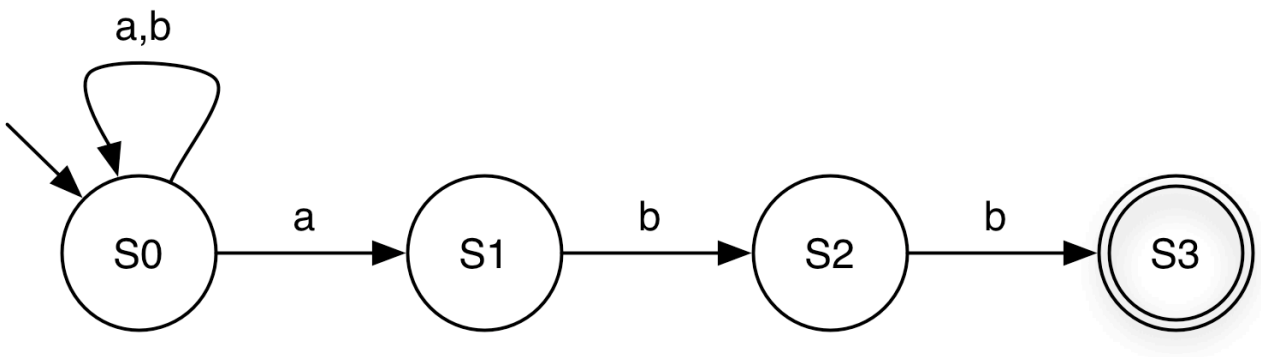

- ba
  - Has paths to either S0 or S1
  - Neither is final, so rejected
- babaabb
  - Has paths to different states
  - One path leads to S3, so accepts string

NFA for (ab|aba)*

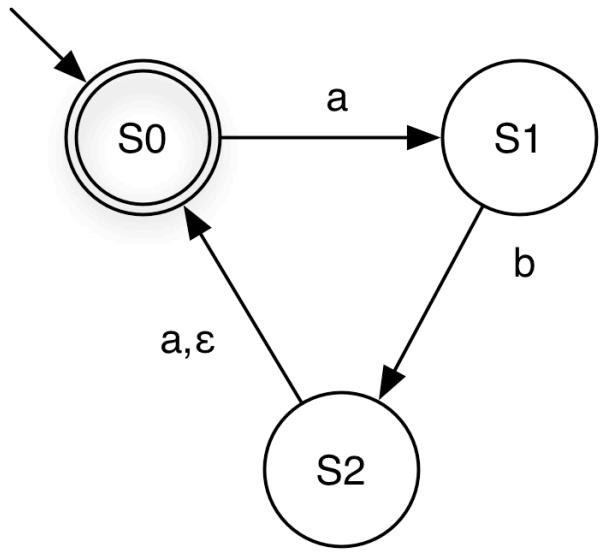

- aba
  - Has paths to states S0, S1
- ababa
  - Has paths to S0, S1
  - Need to use ε-transition

Comparing NFA and DFA for (ab|aba)*

DFA

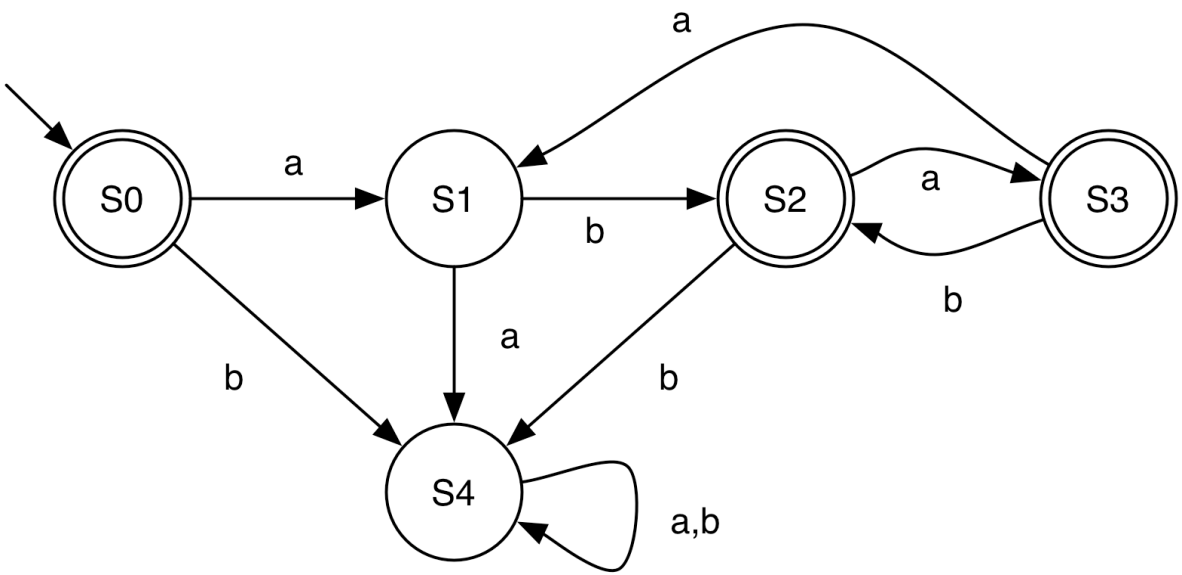

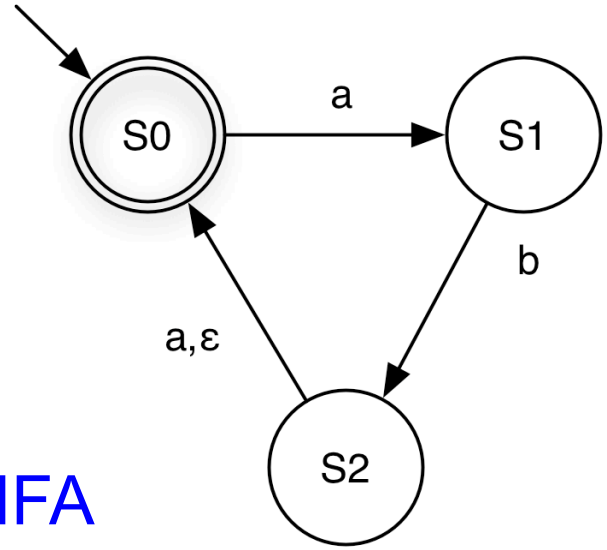

NFA

Quiz 1: Which DFA matches this regexp?

`ba+(a|b)`

A.

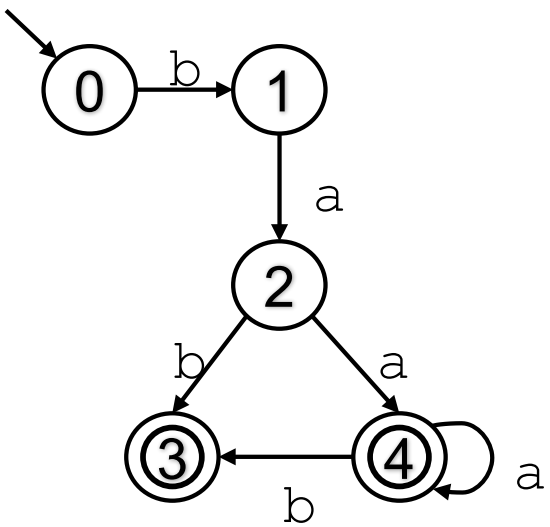

B.

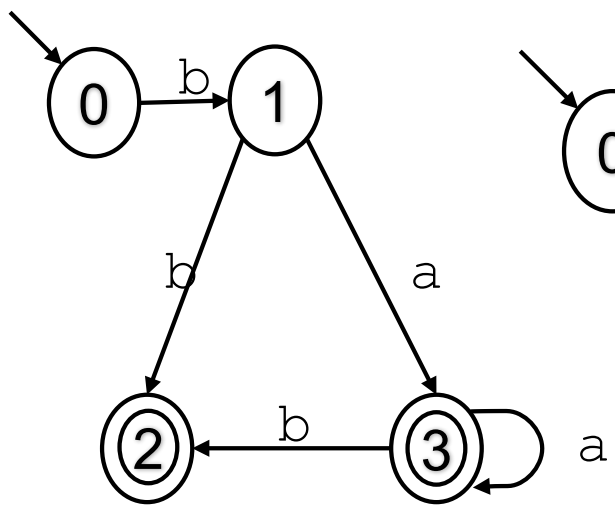

C.

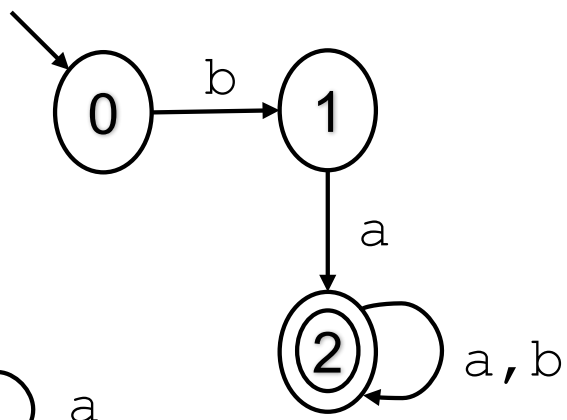

D. None of the above

Quiz 1: Which DFA matches this regexp?

`ba+(a|b)`

A.

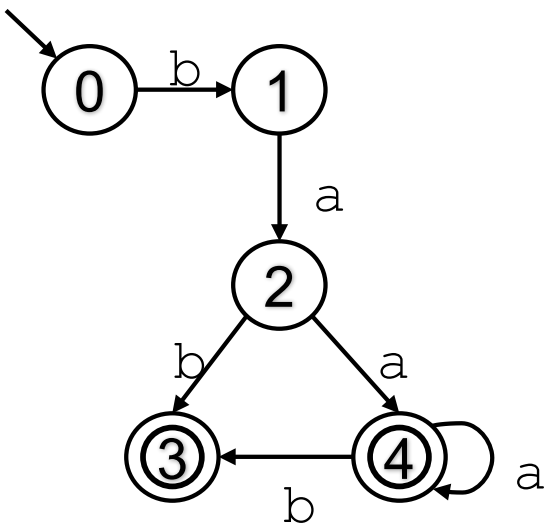

B.

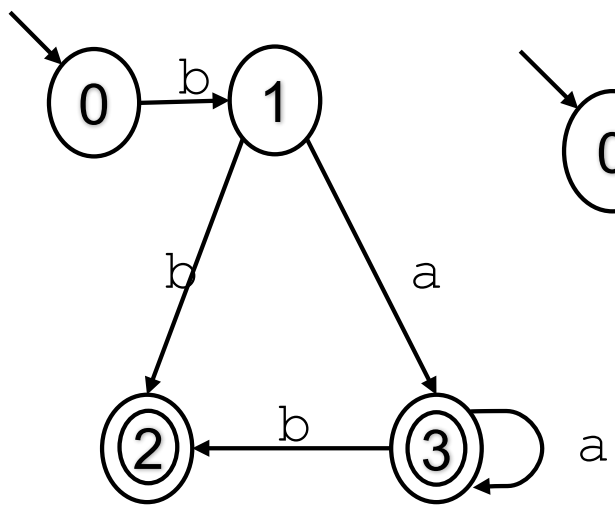

C.

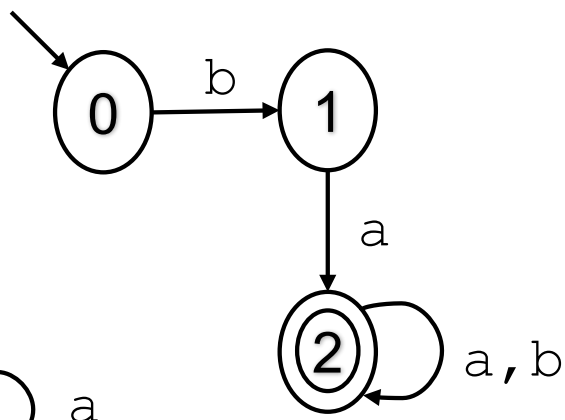

D. None of the above

How NFA Acceptance Works

- When NFA processes a string s
  - NFA must keep track of several "current states"
    - Due to multiple transitions with same label
    - ε-transitions
  - If any current state is final when done then accept s
- Example
  - After processing "a"
    - NFA may be in states

      S1

      S2

      S3

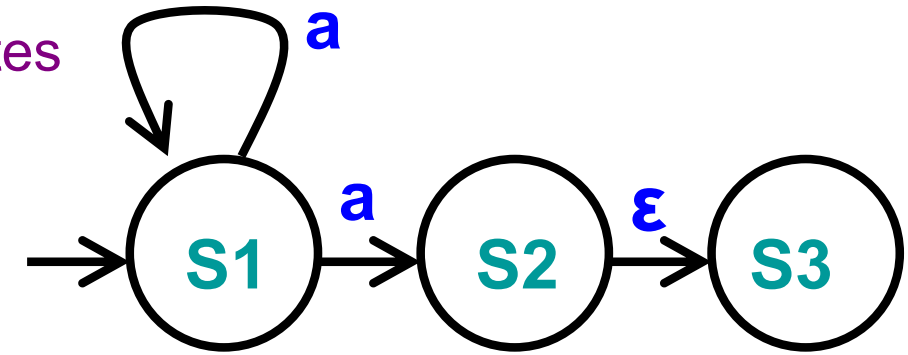

Relating REs to DFAs and NFAs

- Regular expressions, NFAs, and DFAs accept the same languages!

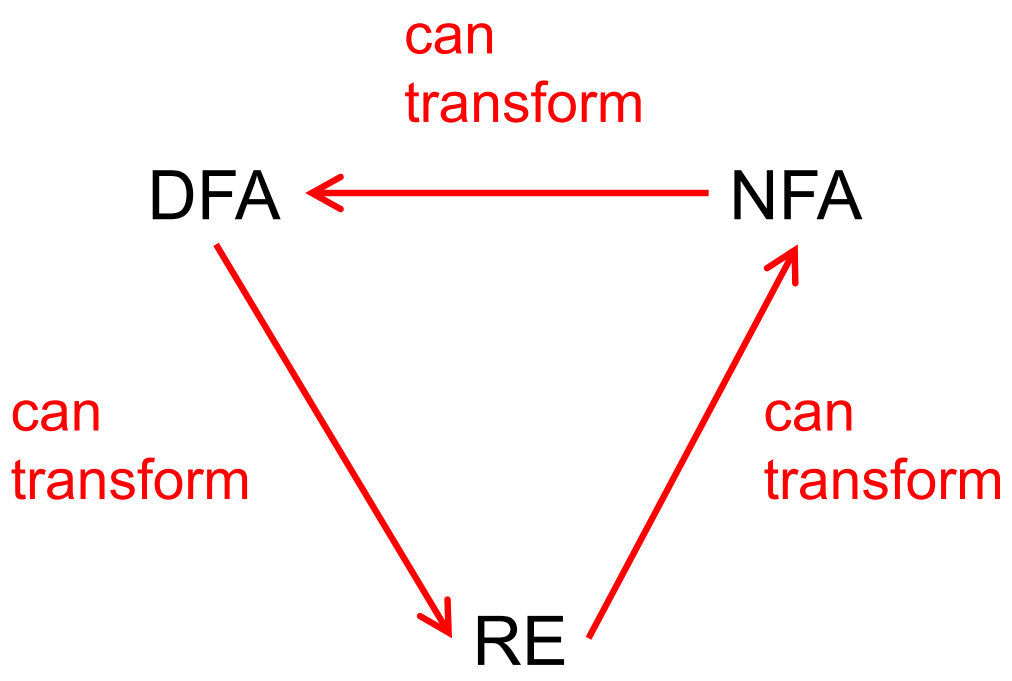

Formal Definition

- A deterministic finite automaton *(DFA)* is a 5-tuple $(\Sigma, Q, q_0, F, \delta)$ where
  - Σ is an alphabet
  - Q is a nonempty set of states
  - $q_0 \in Q$ is the start state
  - $F \subseteq Q$ is the set of final states
  - $\delta : Q \times \Sigma \rightarrow Q$ specifies the DFA's transitions
    - What's this definition saying that δ is?
- A DFA accepts s if it stops at a final state on s

Formal Definition: Example

- $\Sigma = \{0, 1\}$
- $Q = \{S0, S1\}$
- $q_0 = S0$
- $F = \{S1\}$
-

		symbol	
	δ	0	1
input state	S0	S0	S1
	S1	S0	S1

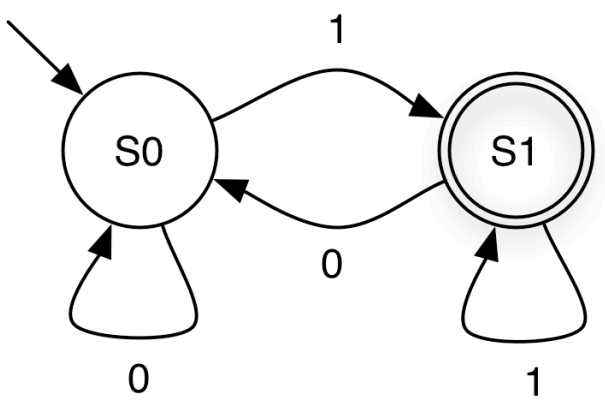

or as { (S0,0,S0),(S0,1,S1),(S1,0,S0),(S1,1,S1) }

Nondeterministic Finite Automata (NFA)

- An *NFA* is a 5-tuple $(\Sigma, Q, q_0, F, \delta)$ where
  - Σ, Q, q0, F as with DFAs
  - $\delta \subseteq Q \times (\Sigma \cup \{\varepsilon\}) \times Q$ specifies the NFA's transitions

- An NFA accepts s if there is at least one path via s from the NFA's start state to a final state

Reducing Regular Expressions to NFAs

- Goal: Given regular expression *A*, construct NFA: <*A*> = $(\Sigma, Q, q_0, F, \delta)$
  - Remember regular expressions are defined recursively from primitive RE languages
  - Invariant: $|F| = 1$ in our NFAs
    - Recall F = set of final states

- Will define <*A*> for base cases: σ , ε , $\varnothing$
  - Where σ is a symbol in Σ
- And for inductive cases: *AB*, *A*|*B*, *A**

Reducing Regular Expressions to NFAs

- Base case: σ

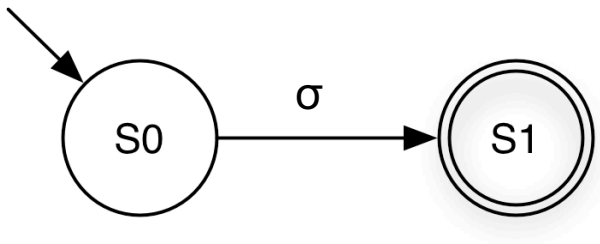

<σ> = ({σ}, {S0, S1}, S0, {S1}, {(S0, σ, S1)})

Reduction

- Base case: ε

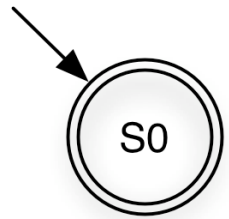

<ε> = (∅, {S0}, S0, {S0}, ∅)

- Base case: ∅

<∅> = (∅, {S0, S1}, S0, {S1}, ∅)

Reduction: Concatenation

- Induction: *AB*

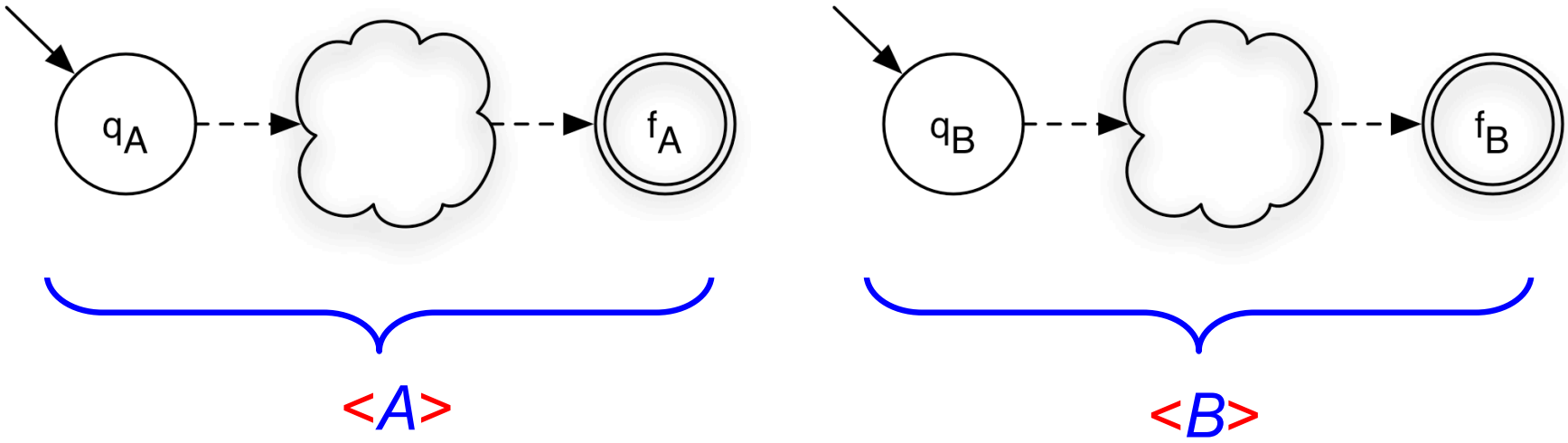

- <*A*> = $(\Sigma_A, Q_A, q_A, \{f_A\}, \delta_A)$
- <*B*> = $(\Sigma_B, Q_B, q_B, \{f_B\}, \delta_B)$

Reduction: Concatenation

- Induction: *AB*

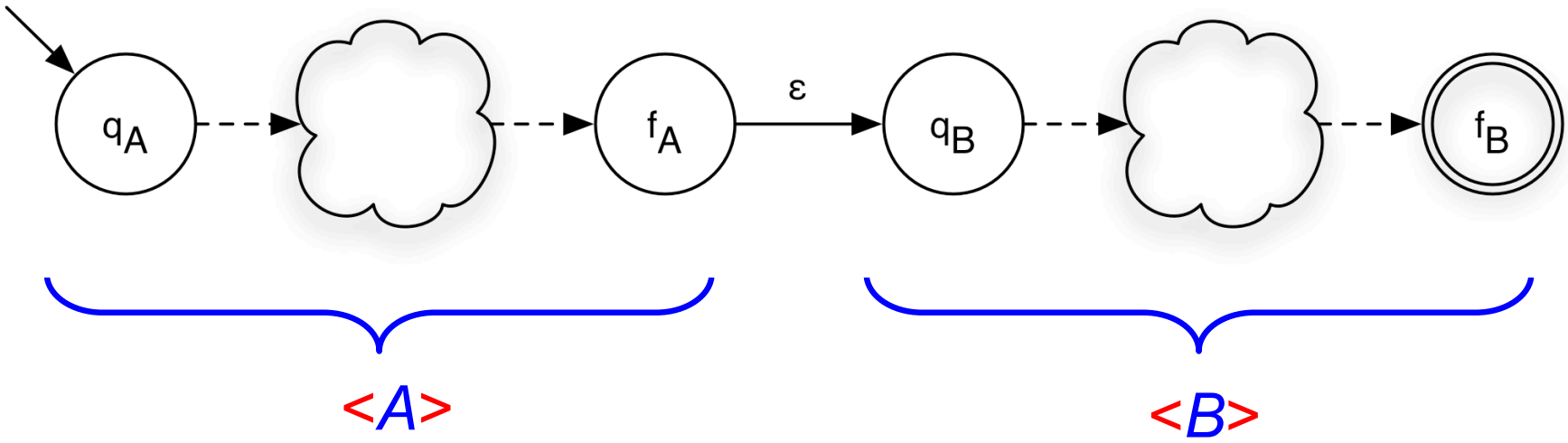

- <*A*> = $(\Sigma_A, Q_A, q_A, \{f_A\}, \delta_A)$
- <*B*> = $(\Sigma_B, Q_B, q_B, \{f_B\}, \delta_B)$
- <*AB*> = $(\Sigma_A \cup \Sigma_B, Q_A \cup Q_B, q_A, \{f_B\}, \delta_A \cup \delta_B \cup \{(f_A,\varepsilon,q_B)\})$

Reduction: Union

- Induction: *A*|*B*

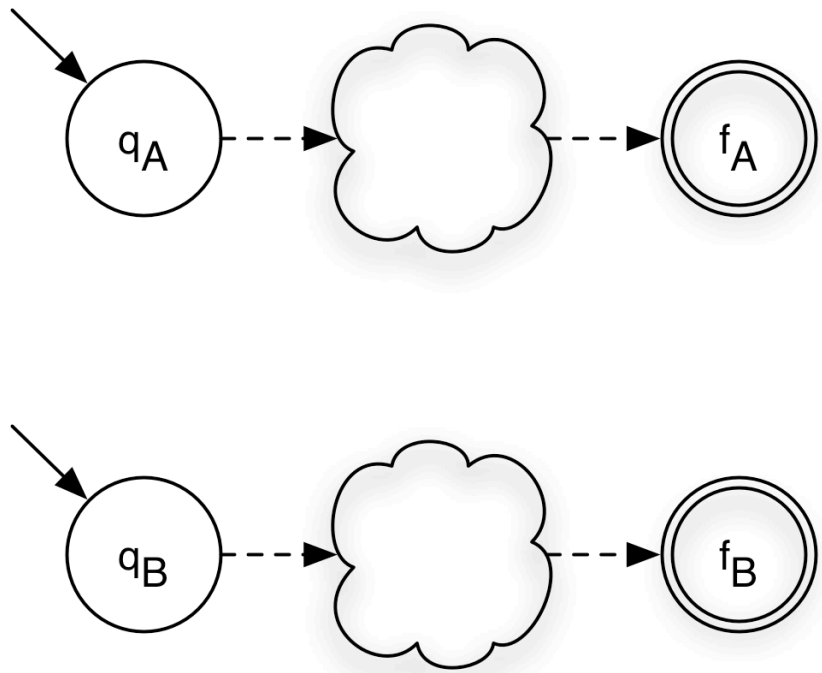

- <*A*> = $(\Sigma_A, Q_A, q_A, \{f_A\}, \delta_A)$
- <*B*> = $(\Sigma_B, Q_B, q_B, \{f_B\}, \delta_B)$

Reduction: Union

- Induction: *A*|*B*

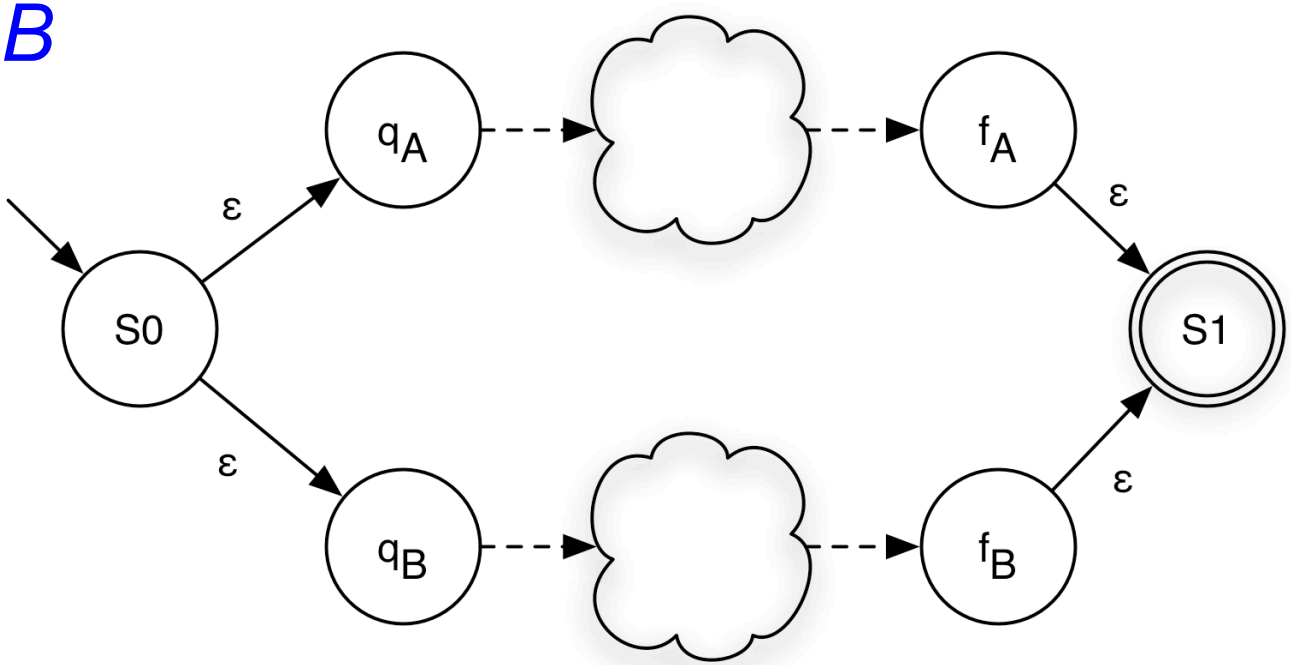

- <*A*> = $(\Sigma_A, Q_A, q_A, \{f_A\}, \delta_A)$
- <*B*> = $(\Sigma_B, Q_B, q_B, \{f_B\}, \delta_B)$
- <*A*|*B*> = $(\Sigma_A \cup \Sigma_B, Q_A \cup Q_B \cup \{S0,S1\}, S0, \{S1\},$
  $\delta_A \cup \delta_B \cup \{(S0,\varepsilon,q_A), (S0,\varepsilon,q_B), (f_A,\varepsilon,S1), (f_B,\varepsilon,S1)\})$

Reduction: Closure

- Induction: *A**

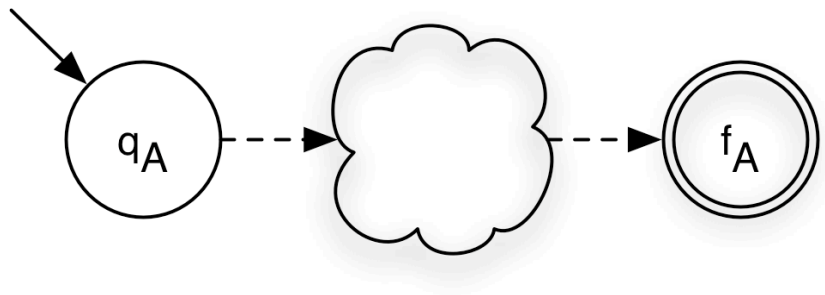

- <*A*> = $(\Sigma_A, Q_A, q_A, \{f_A\}, \delta_A)$

Reduction: Closure

- Induction: *A**

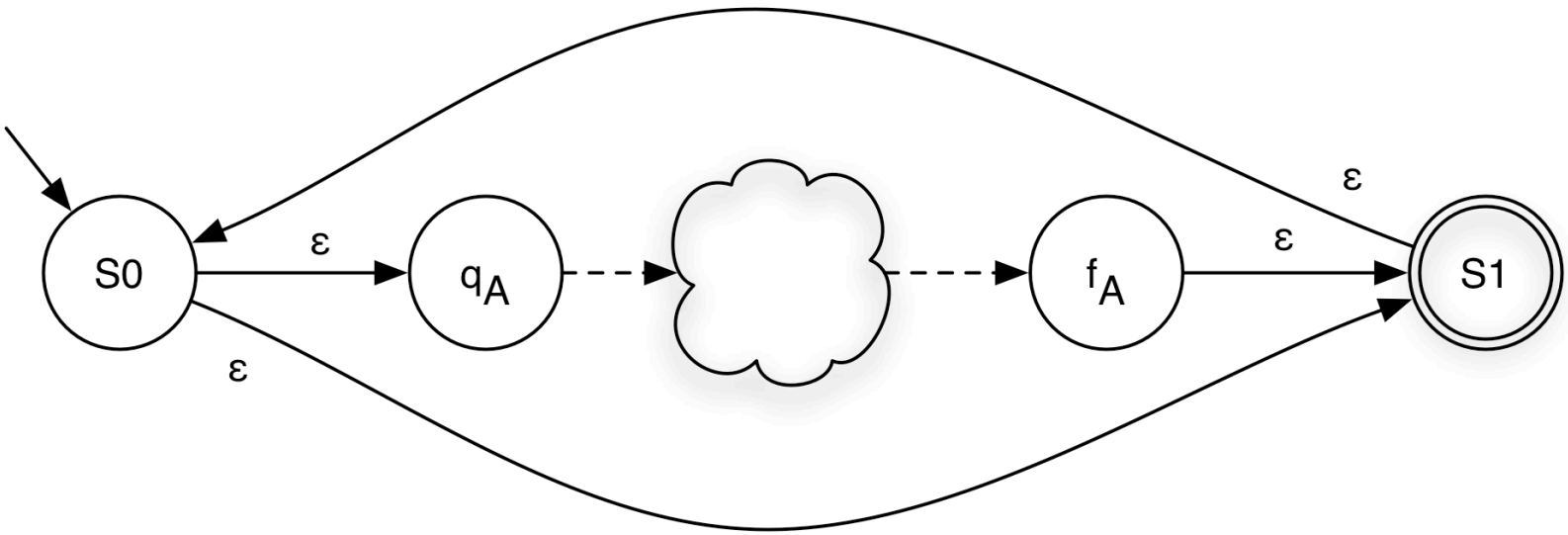

- <*A*> = $(\Sigma_A, Q_A, q_A, \{f_A\}, \delta_A)$
- <*A**> = $(\Sigma_A, Q_A \cup \{S0,S1\}, S0, \{S1\},$
  $\delta_A \cup \{(f_A,\varepsilon,S1), (S0,\varepsilon,q_A), (S0,\varepsilon,S1), (S1,\varepsilon,S0)\})$

RE-> NFA

Draw NFAs for the regular expression (0|1)*110*

Quiz 2: Which NFA matches **a*** ?

A.

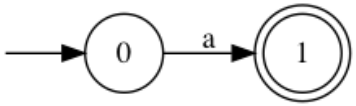

B.

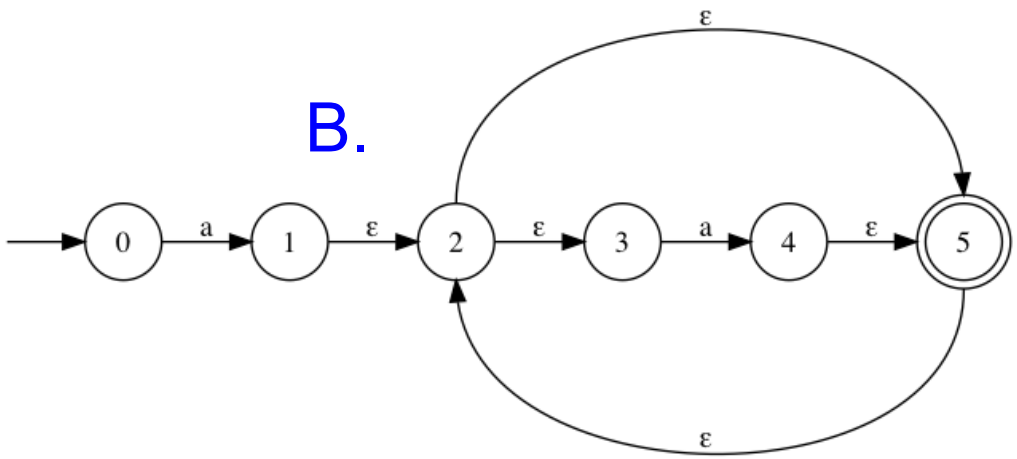

C.

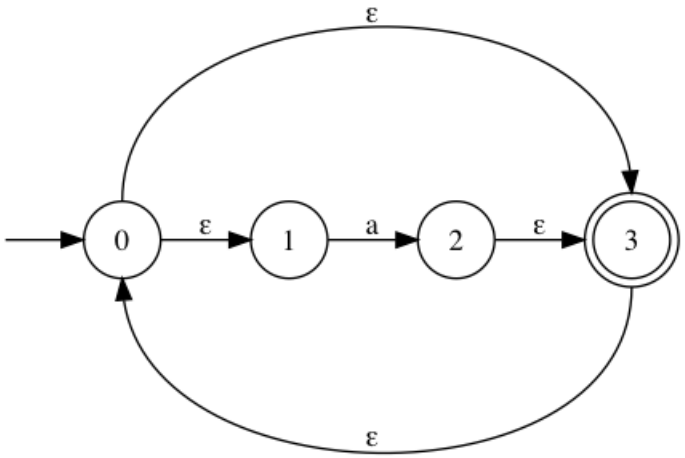

D.

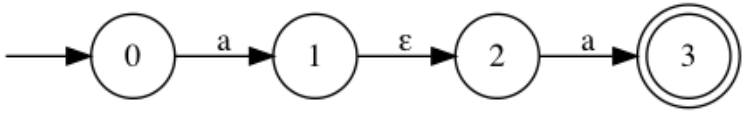

Quiz 2: Which NFA matches **a*** ?

A.

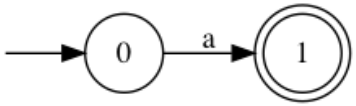

B.

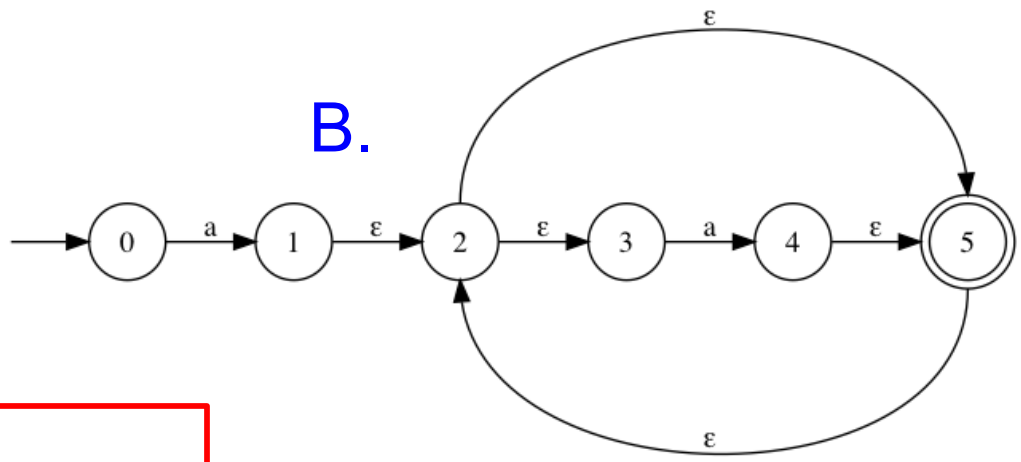

C.

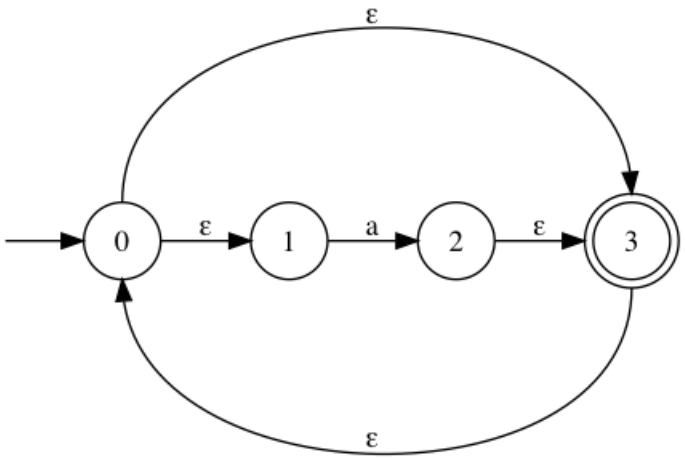

D.

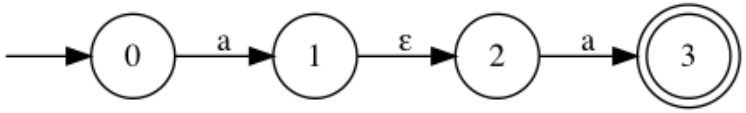

Quiz 3: Which NFA matches **a|b*** ?

A.

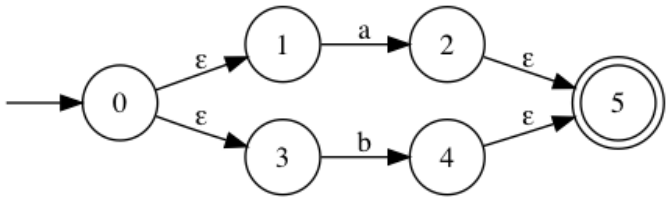

B.

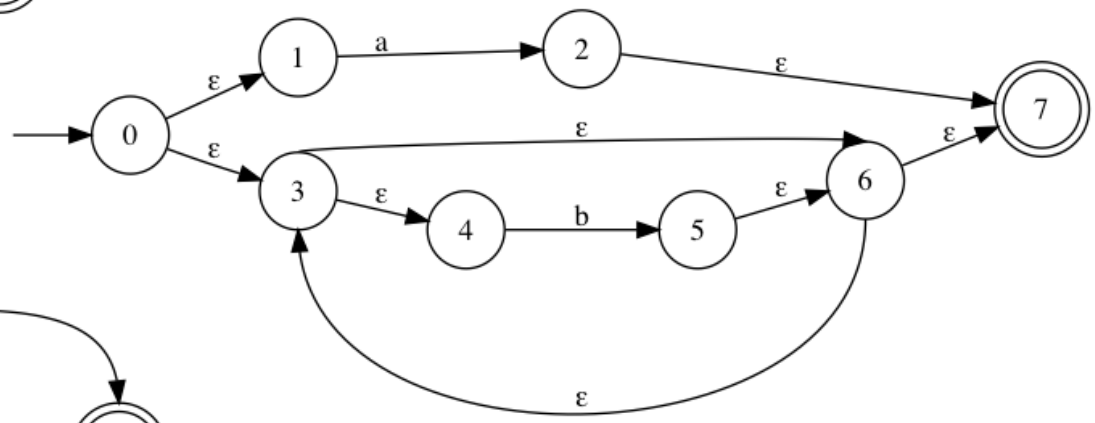

C.

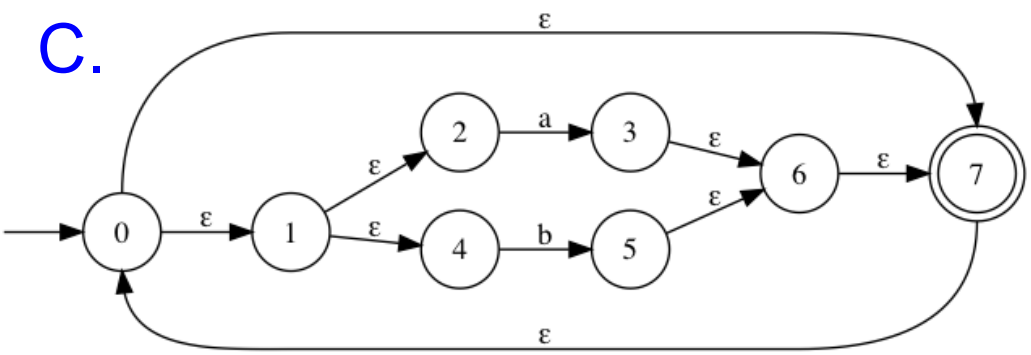

D.

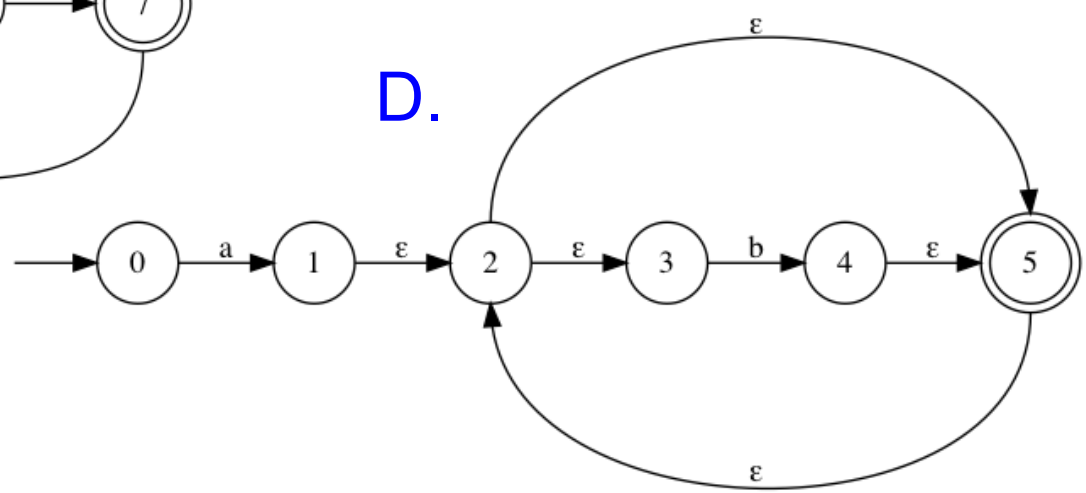

Quiz 3: Which NFA matches **a|b*** ?

A.

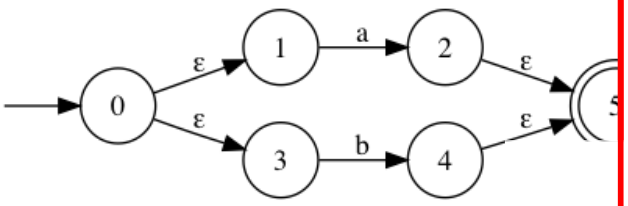

B.

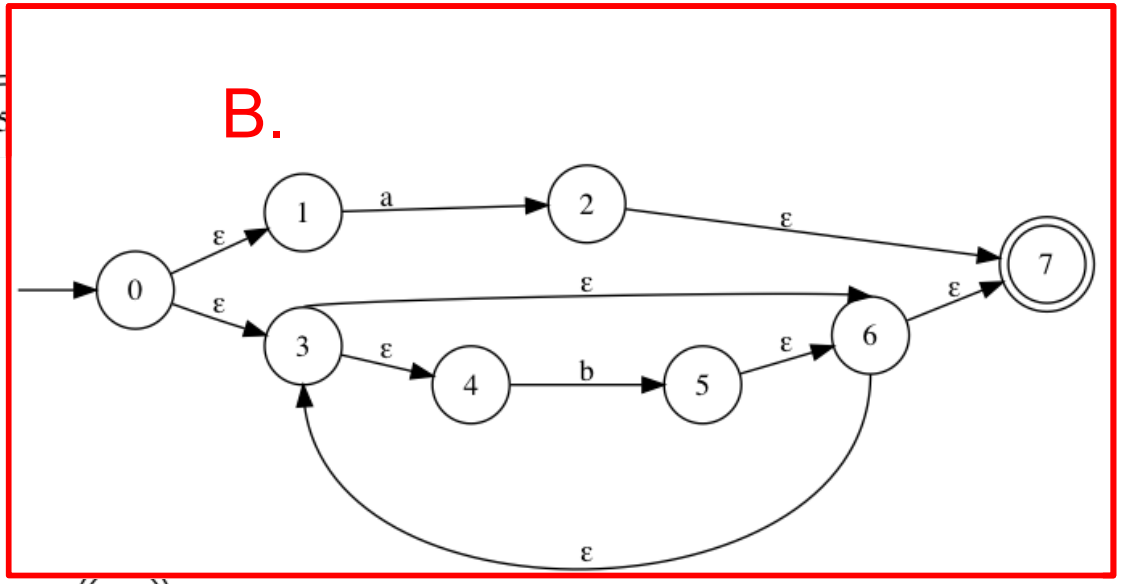

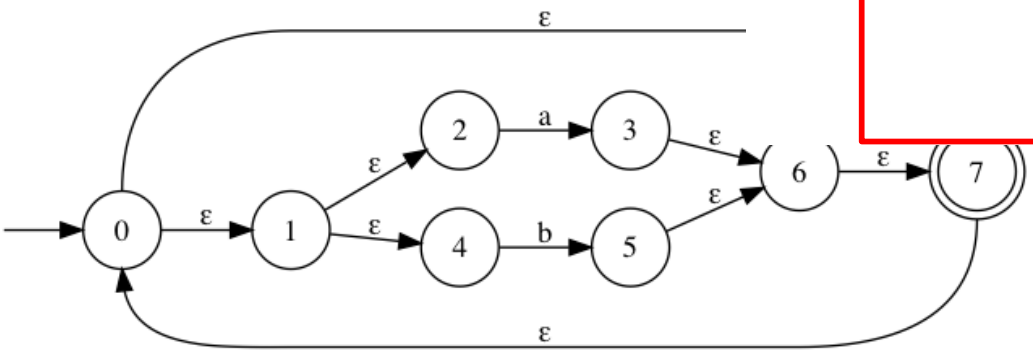

D.

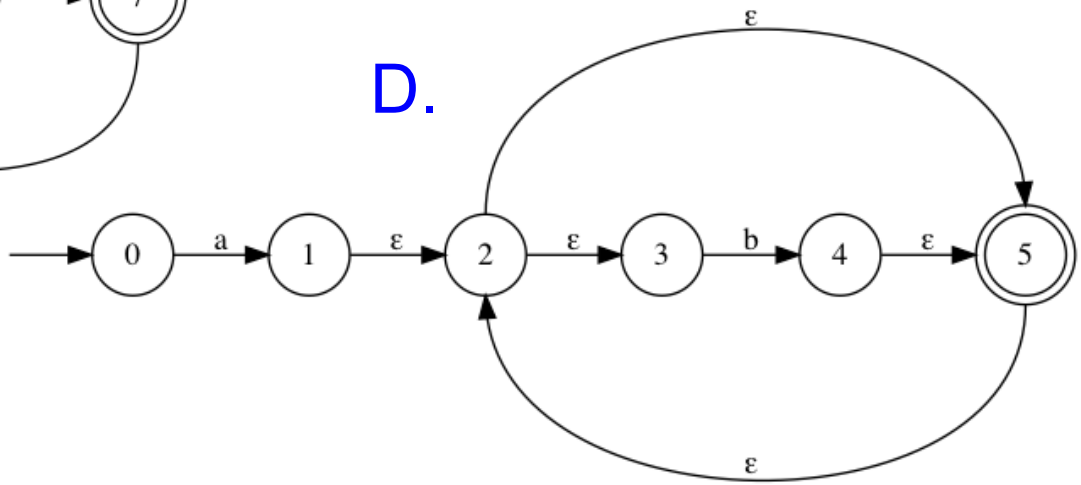

RE-> NFA

Draw NFAs for the regular expression (ab*c|d*a|ab)d

Reduction Complexity

- Given a regular expression *A* of size n...

  Size = # of symbols + # of operations

- How many states does <*A*> have?
  - Two added for each **|**, two added for each *****
  - O(n)
  - That's pretty good!

Recap

- Finite automata
  - Alphabet, states…
  - $(\Sigma, Q, q_0, F, \delta)$
- Types
  - Deterministic (DFA)

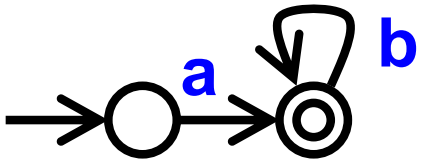

  - Non-deterministic (NFA)

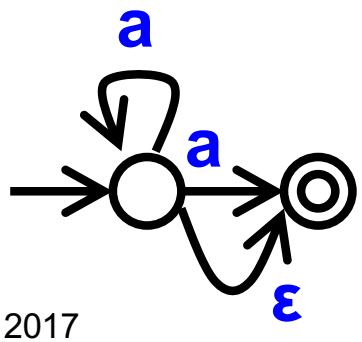

- Reducing RE to NFA
  - Concatenation

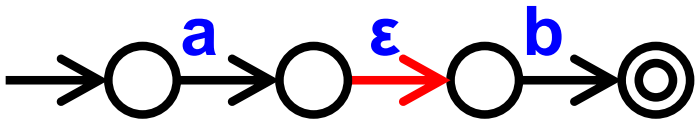

  - Union

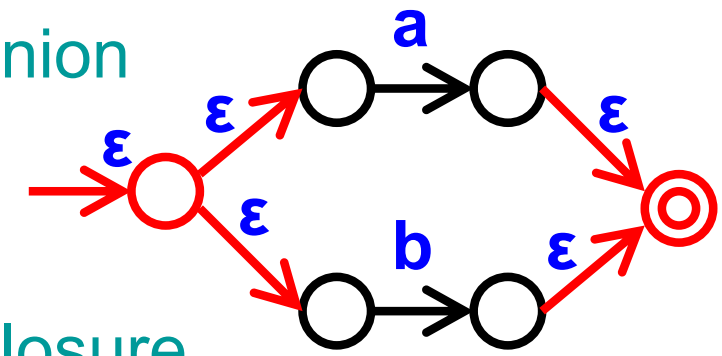

  - Closure

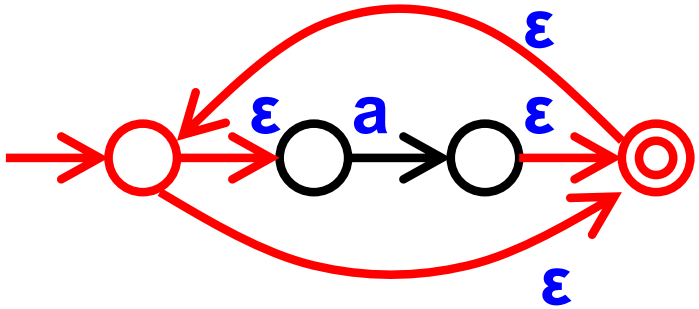

Reducing NFA to DFA

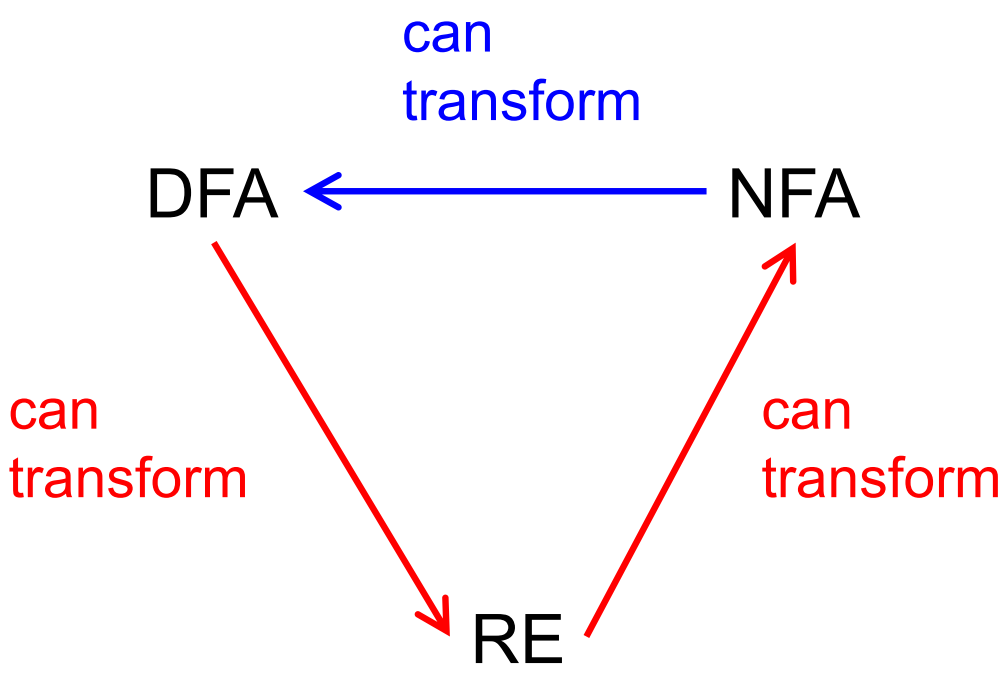

Reducing NFA to DFA

- NFA may be reduced to DFA
  - By explicitly tracking the set of NFA states
- Intuition
  - Build DFA where
    - Each DFA state represents a set of NFA "current states"
- Example

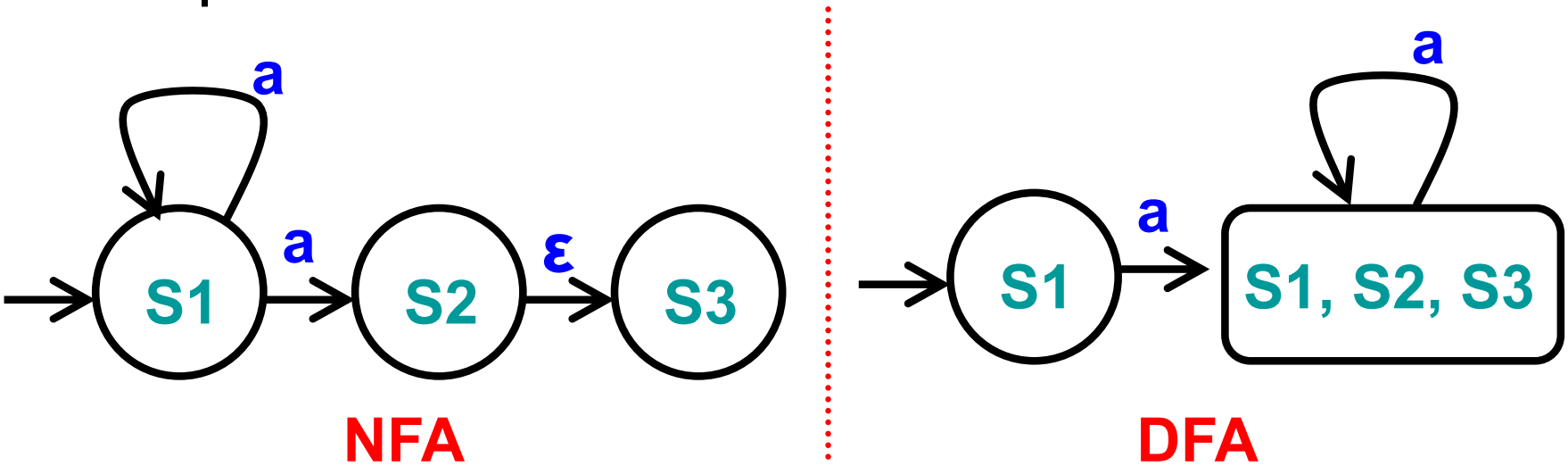

Algorithm for Reducing NFA to DFA

- Reduction applied using the subset algorithm
  - DFA state is a subset of set of all NFA states
- Algorithm
  - Input
    - NFA (Σ, Q, q_0, F_n, δ)
  - Output
    - DFA (Σ, R, r_0, F_d, δ)
  - Using two subroutines
    - ε-closure(p)
    - move(p, a)

ε-transitions and ε-closure

- We say $p \xrightarrow{\varepsilon} q$
  - If it is possible to go from state p to state q by taking only ε-transitions
  - If $\exists$ $p, p_1, p_2, \ldots p_n, q \in Q$ such that
    - $\{p,\varepsilon,p_1\} \in \delta$, $\{p_1,\varepsilon,p_2\} \in \delta$, … , $\{p_n,\varepsilon,q\} \in \delta$
- ε-closure(p)
  - Set of states reachable from p using ε-transitions alone
    - Set of states q such that $p \xrightarrow{\varepsilon} q$
    - ε-closure(p) = $\{q \mid p \xrightarrow{\varepsilon} q\}$
  - Note
    - ε-closure(p) always includes p
    - ε-closure( ) may be applied to set of states (take union)

ε-closure: Example 1

- Following NFA contains
  - S1 $\xrightarrow{\varepsilon}$ S2
  - S2 $\xrightarrow{\varepsilon}$ S3
  - S1 $\xrightarrow{\varepsilon}$ S3
    - Since S1 $\xrightarrow{\varepsilon}$ S2 and S2 $\xrightarrow{\varepsilon}$ S3

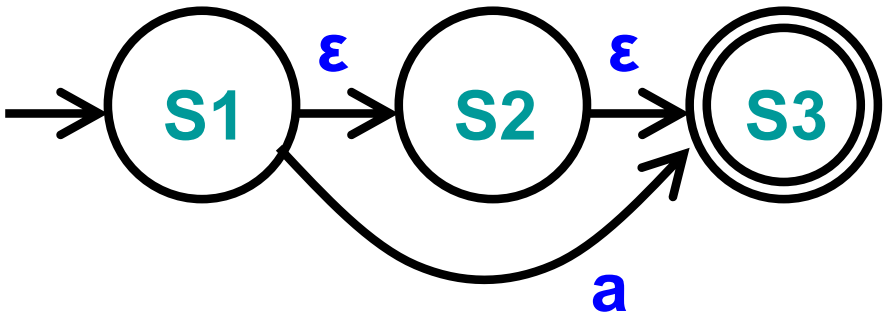

- ε-closures
  - ε-closure(S1) = { }
  - ε-closure(S2) = { }
  - ε-closure(S3) = { }
  - ε-closure({ S1, S2 }) = { } ∪ { }

ε-closure: Example 1

- Following NFA contains
  - S1 $\xrightarrow{\varepsilon}$ S2
  - S2 $\xrightarrow{\varepsilon}$ S3
  - S1 $\xrightarrow{\varepsilon}$ S3
    - Since S1 $\xrightarrow{\varepsilon}$ S2 and S2 $\xrightarrow{\varepsilon}$ S3

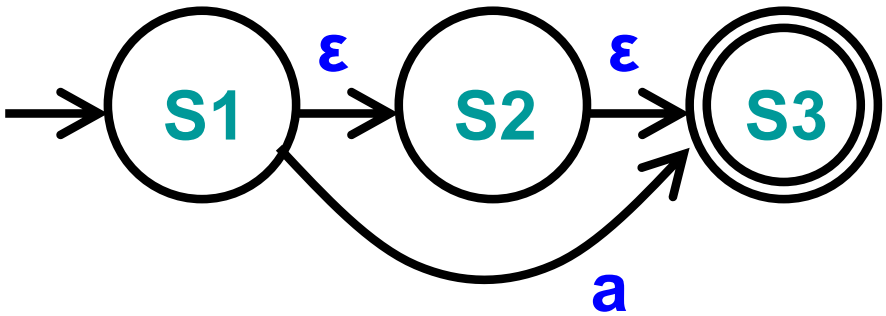

- ε-closures
  - ε-closure(S1) = { S1, S2, S3 }
  - ε-closure(S2) = { S2, S3 }
  - ε-closure(S3) = { S3 }
  - ε-closure({ S1, S2 }) = { S1, S2, S3 } ∪ { S2, S3 }

ε-closure: Example 2

- Following NFA contains
  - S1 $\xrightarrow{\varepsilon}$ S3
  - S3 $\xrightarrow{\varepsilon}$ S2
  - S1 $\xrightarrow{\varepsilon}$ S2
    - Since S1 $\xrightarrow{\varepsilon}$ S3 and S3 $\xrightarrow{\varepsilon}$ S2

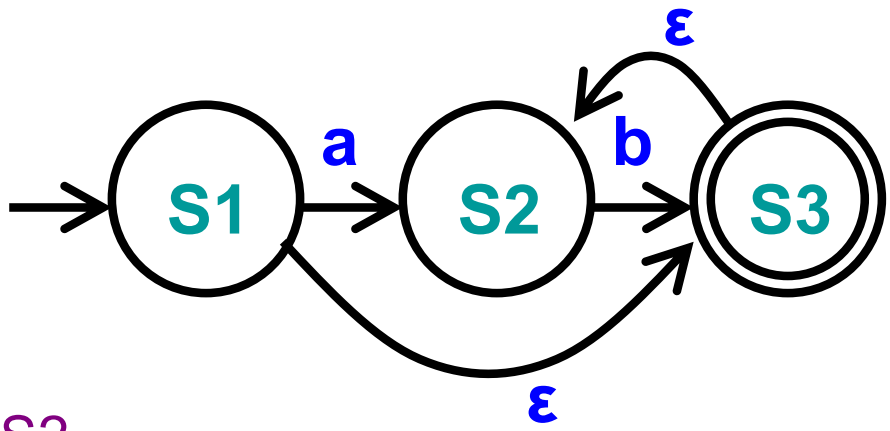

- ε-closures
  - ε-closure(S1) = { }
  - ε-closure(S2) = { }
  - ε-closure(S3) = { }
  - ε-closure({ S2,S3 }) = { } ∪ { }

ε-closure: Example 2

- Following NFA contains
  - S1 $\xrightarrow{\varepsilon}$ S3
  - S3 $\xrightarrow{\varepsilon}$ S2
  - S1 $\xrightarrow{\varepsilon}$ S2
    - Since S1 $\xrightarrow{\varepsilon}$ S3 and S3 $\xrightarrow{\varepsilon}$ S2

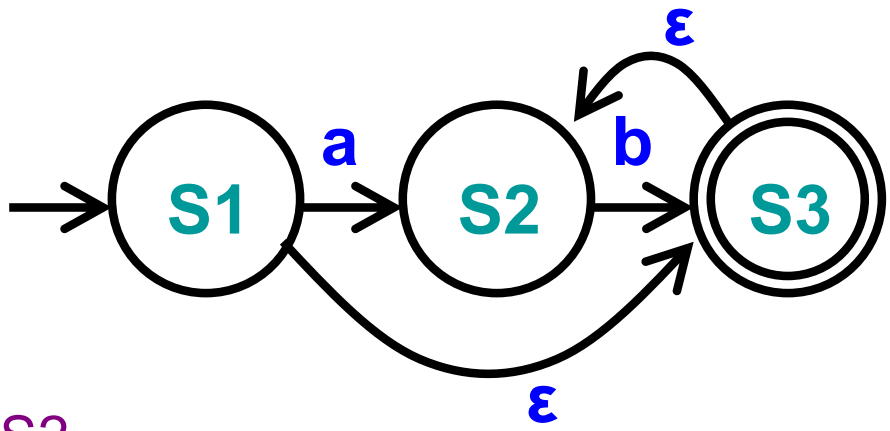

- ε-closures
  - ε-closure(S1) = { S1, S2, S3 }
  - ε-closure(S2) = { S2 }
  - ε-closure(S3) = { S2, S3 }
  - ε-closure({ S2,S3 }) = { S2 } ∪ { S2, S3 }

Calculating move(p,a)

- move(p,a)
  - Set of states reachable from p using exactly one transition on a
    - Set of states q such that $\{p, a, q\} \in \delta$
    - $move(p,a) = \{q \mid \{p, a, q\} \in \delta\}$
  - Note: move(p,a) may be empty $\emptyset$
    - If no transition from p with label a

move(a,p) : Example 1

- Following NFA
  - Σ = { a, b }

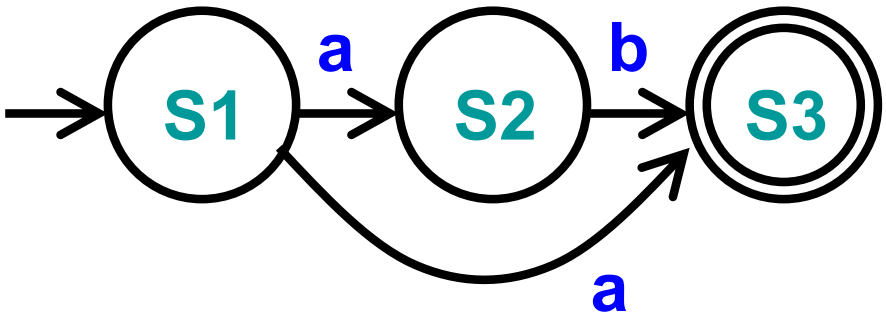

- Move
  - move(S1, a) = { }
  - move(S1, b) =
  - move(S2, a) =
  - move(S2, b) = { }
  - move(S3, a) =
  - move(S3, b) =

move(a,p) : Example 1

- Following NFA
  - Σ = { a, b }

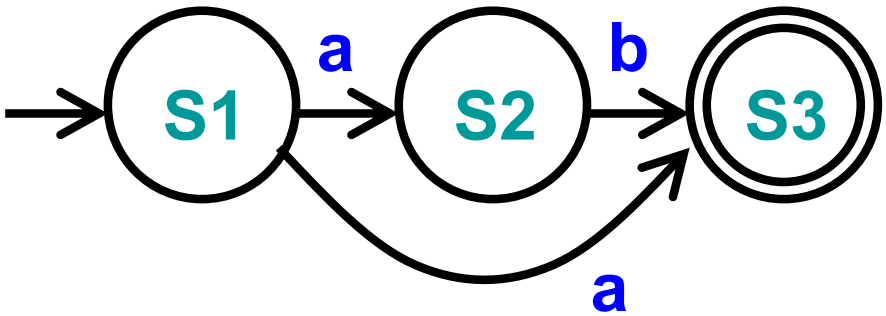

- Move
  - move(S1, a) = { S2, S3 }
  - move(S1, b) = Ø
  - move(S2, a) = Ø
  - move(S2, b) = { S3 }
  - move(S3, a) = Ø
  - move(S3, b) = Ø

move(a,p) : Example 2

- Following NFA
  - Σ = { a, b }

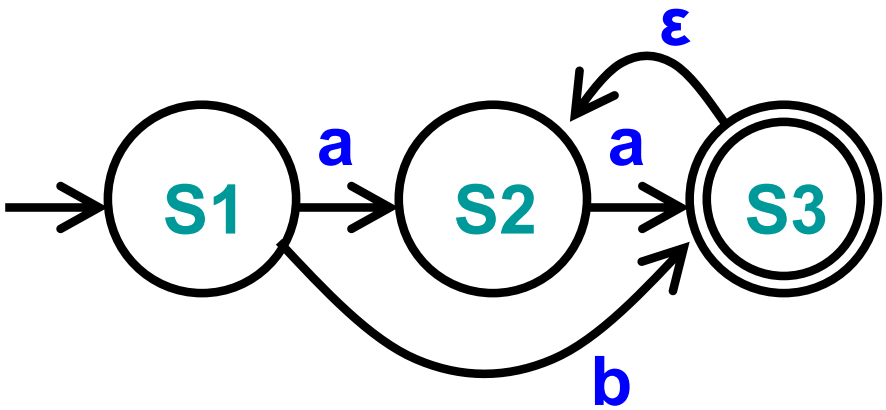

- Move
  - move(S1, a) = { }
  - move(S1, b) = { }
  - move(S2, a) = { }
  - move(S2, b) =
  - move(S3, a) =
  - move(S3, b) =

move(a,p) : Example 2

- Following NFA
  - Σ = { a, b }

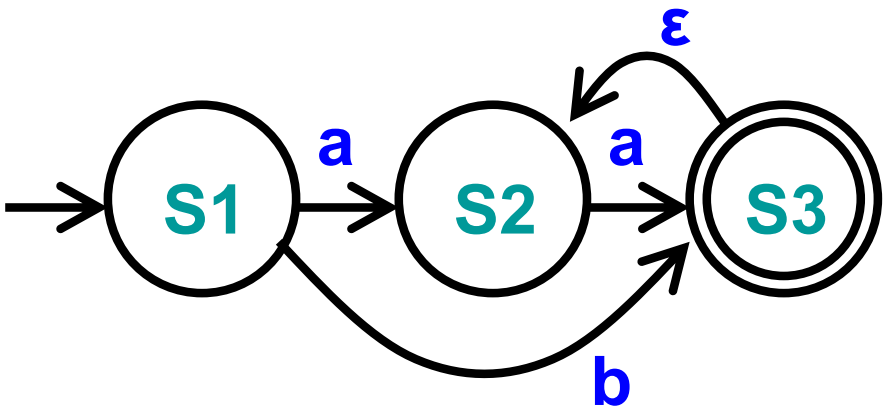

- Move
  - move(S1, a) = { S2 }
  - move(S1, b) = { S3 }
  - move(S2, a) = { S3 }
  - move(S2, b) = Ø
  - move(S3, a) = Ø
  - move(S3, b) = Ø

NFA → DFA Reduction Algorithm ("subset")

- Input NFA $(\Sigma, Q, q_0, F_n, \delta)$, Output DFA $(\Sigma, R, r_0, F_d, \delta)$
- Algorithm

```
Let r0 = ε-closure(q0), add it to R                    // DFA start state
While ∃ an unmarked state r ∈ R                        // process DFA state r
    Mark r                                             // each state visited once
    For each a ∈ Σ                                     // for each letter a
        Let S = {s | q ∈ r & move(q,a) = s}            // states reached via a
        Let e = ε-closure(S)                           // states reached via ε
        If e ∉ R                                       // if state e is new
            Let R = R ∪ {e}                            // add e to R (unmarked)
        Let δ = δ ∪ {r, a, e}                          // add transition r→e
Let Fd = {r | ∃ s ∈ r with s ∈ Fn}                     // final if include state in Fn
```

NFA → DFA Example

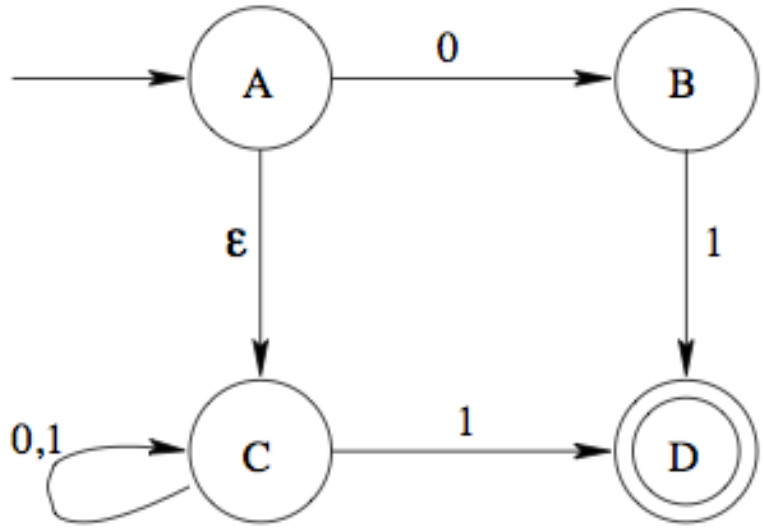

NFA → DFA Example

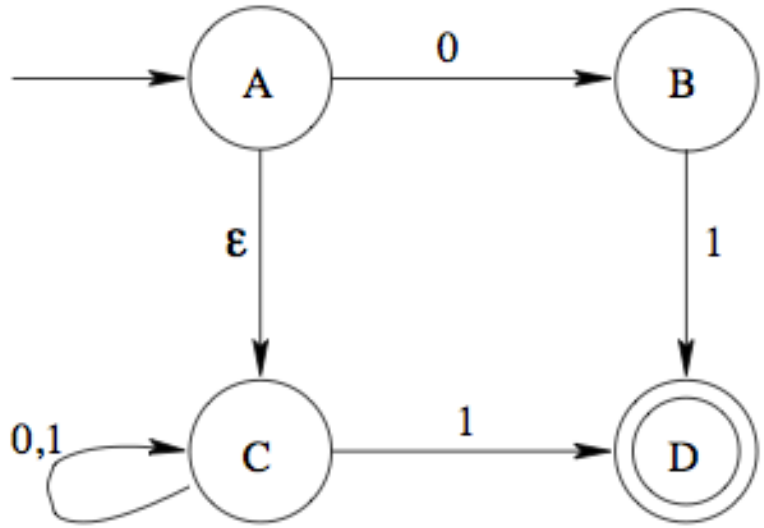

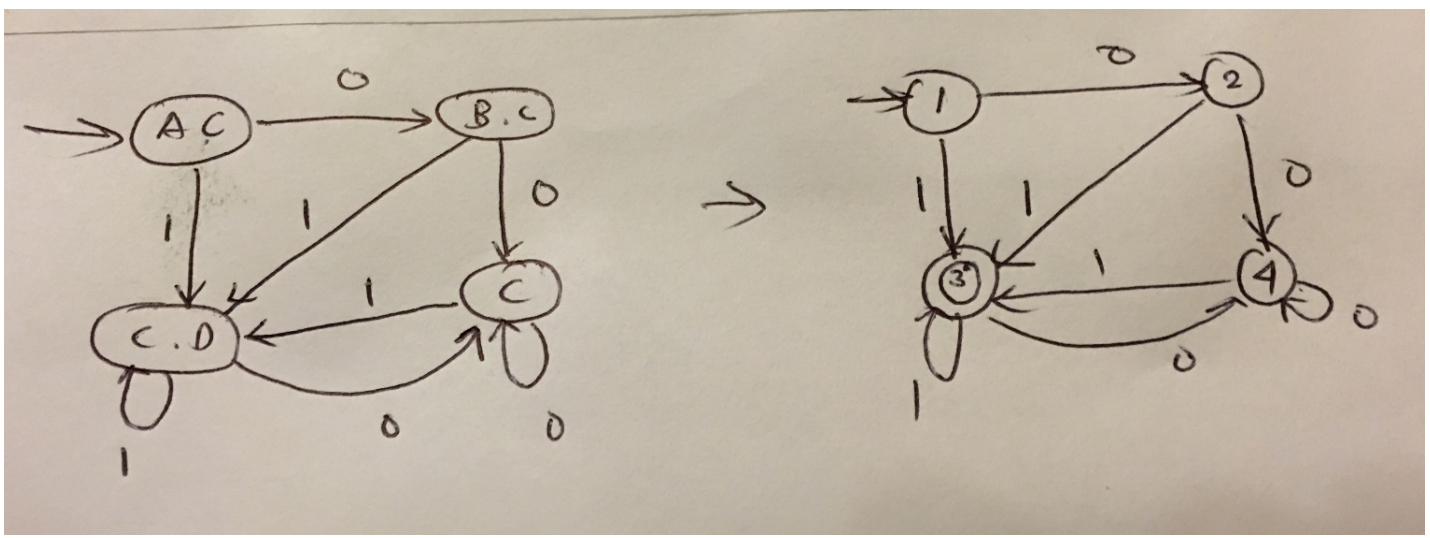

NFA → DFA Example 1

- Start = ε-closure(S1) = { {S1,S3} }
- R = { {S1,S3} }
- r ∈ R = {S1,S3}
- Move({S1,S3},a) = {S2}
  - e = ε-closure({S2}) = {S2}
  - R = R ∪ {{S2}} = { {S1,S3}, {S2} }
  - δ = δ ∪ {{S1,S3}, a, {S2}}
- Move({S1,S3},b) = Ø

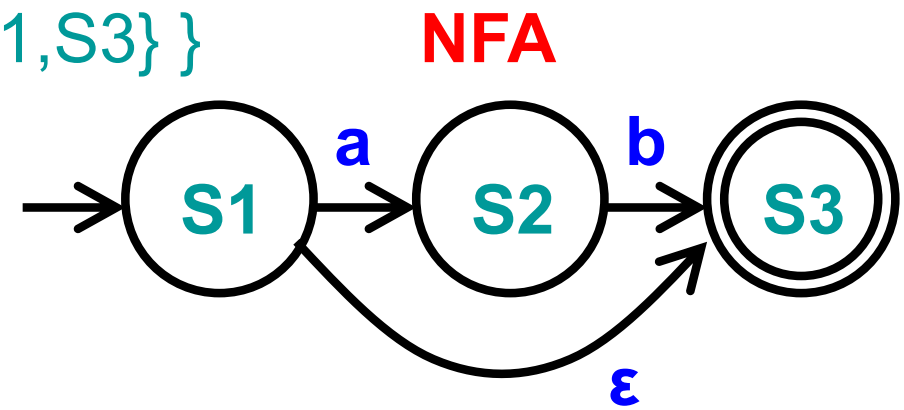

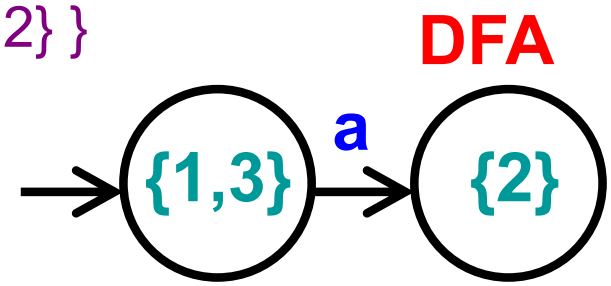

NFA → DFA Example 1 (cont.)

- R = { {S1,S3}, {S2} }
- r ∈ R = {S2}
- Move({S2},a) = Ø
- Move({S2},b) = {S3}
  - e = ε-closure({S3}) = {S3}
  - R = R ∪ {{S3}} = { {S1,S3}, {S2}, {S3} }
  - δ = δ ∪ {{S2}, b, {S3}}

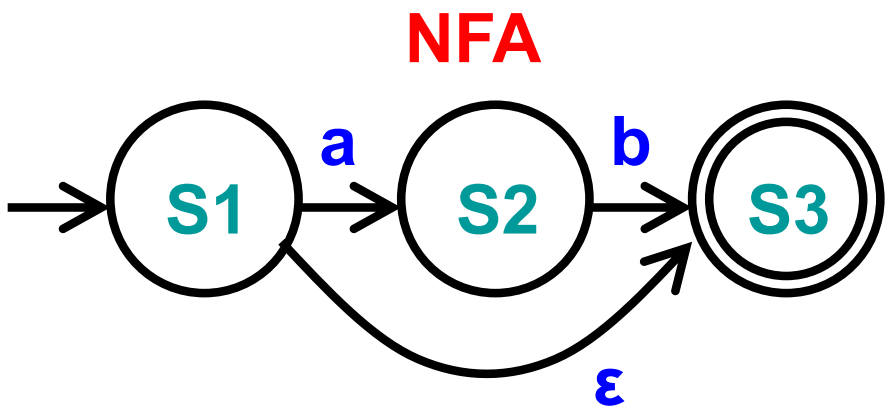

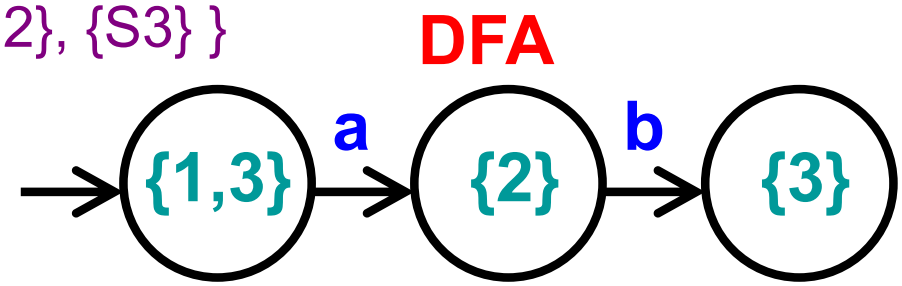

NFA → DFA Example 1 (cont.)

- R = { {S1,S3}, {S2}, {S3} }
- r ∈ R = {S3}
- Move({S3},a) = Ø
- Move({S3},b) = Ø
- Mark {S3}, exit loop
- F_d = {{S1,S3}, {S3}}
  - Since S3 ∈ F_n
- Done!

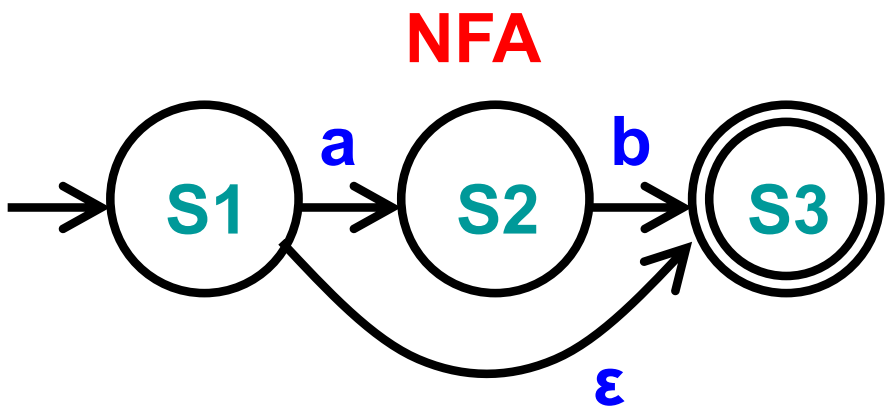

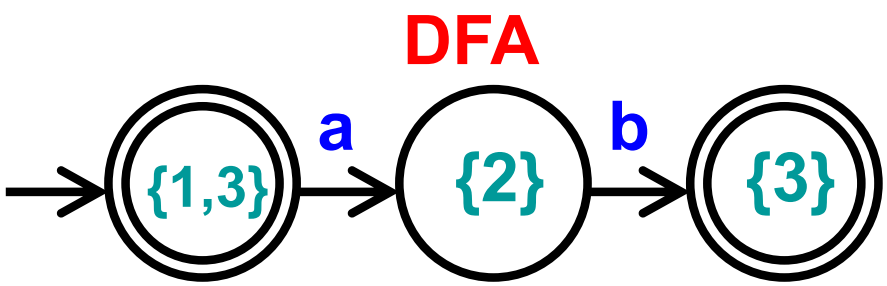

NFA → DFA Example 2

- NFA

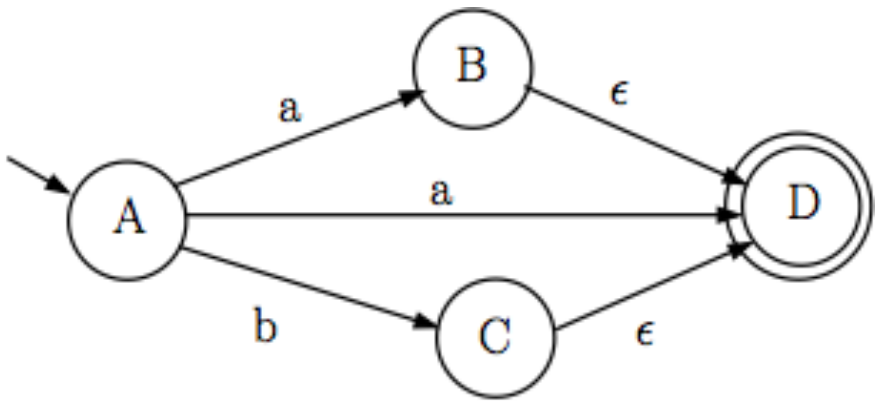

- DFA

NFA → DFA Example 2

- NFA

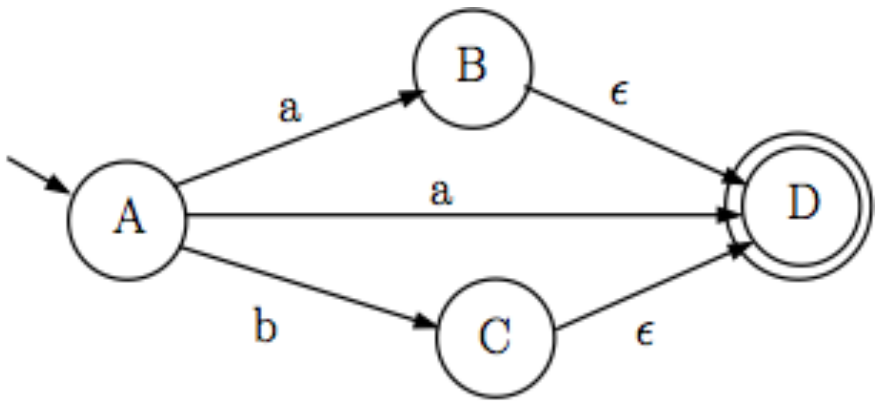

- DFA

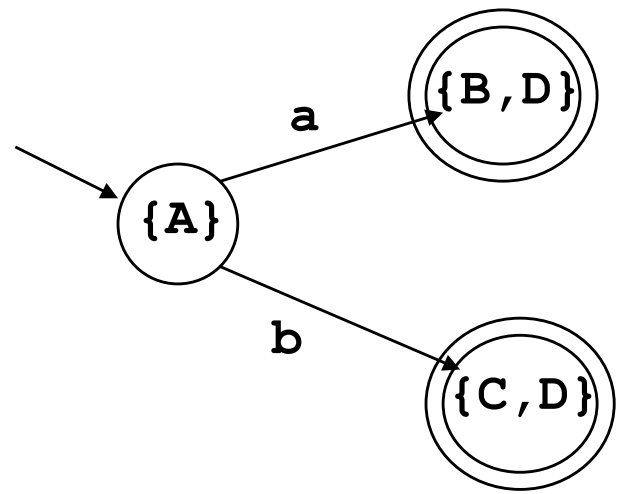

R = { {A}, {B,D}, {C,D} }

Quiz 4: Which DFA is equiv to this NFA?

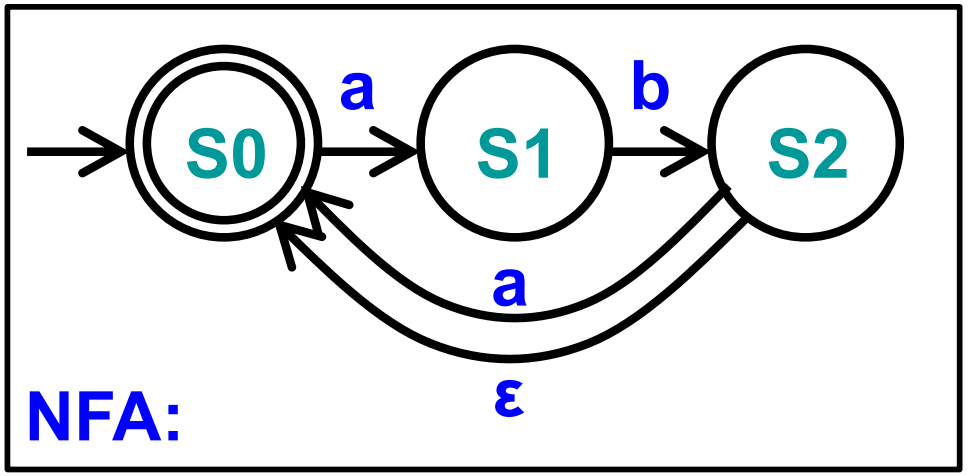

A.

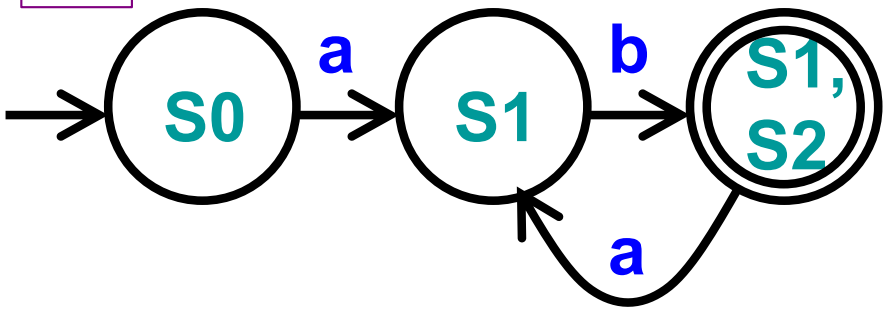

B.

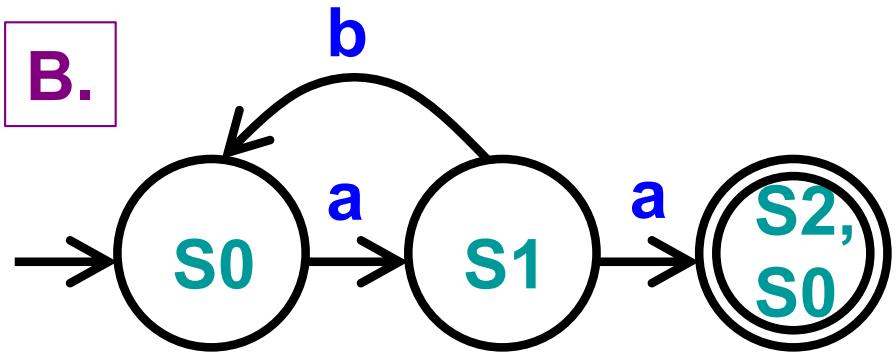

C.

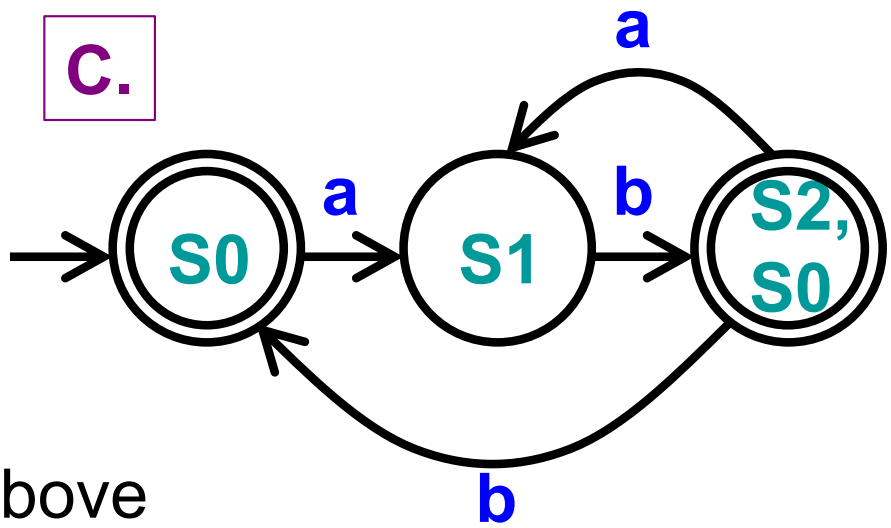

D. None of the above

Quiz 4: Which DFA is equiv to this NFA?

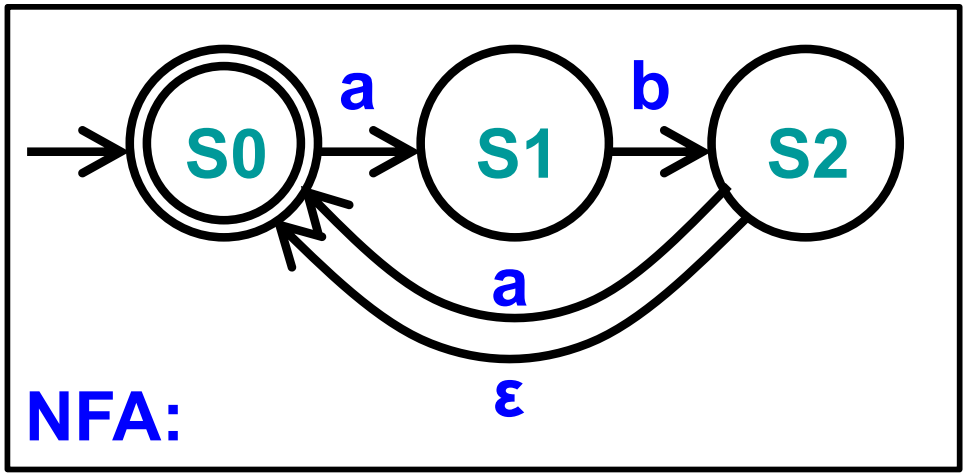

A.

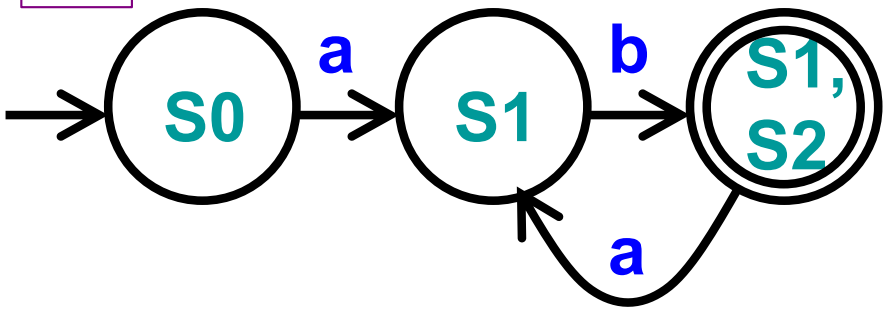

B.

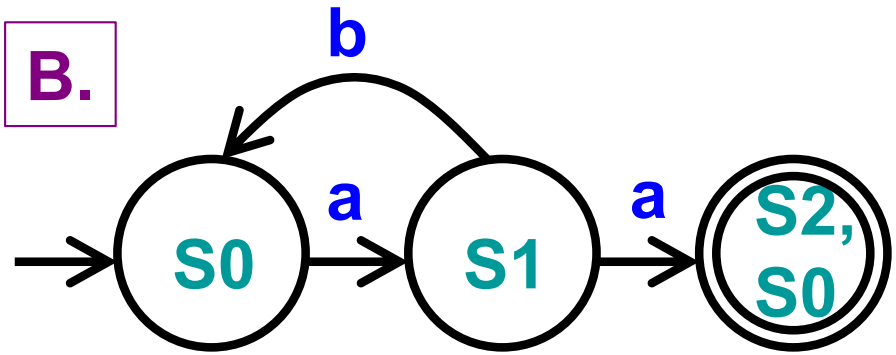

C.

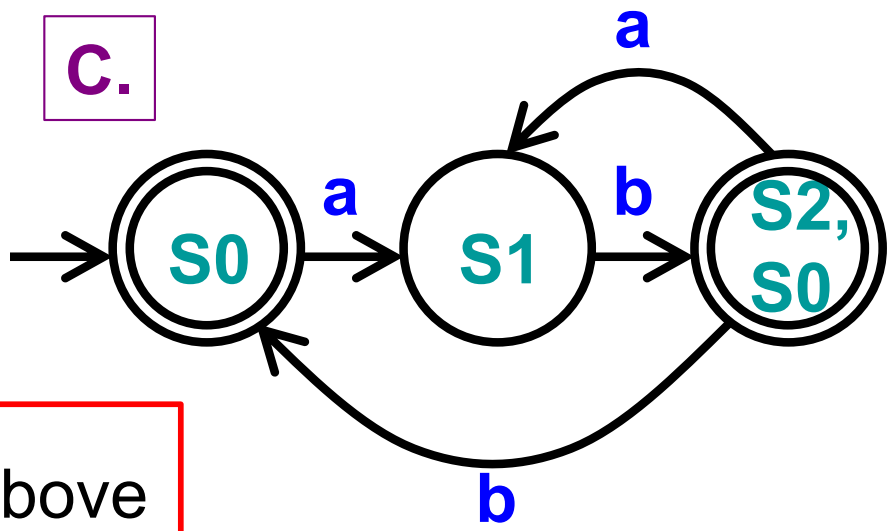

D. None of the above

Actual Answer

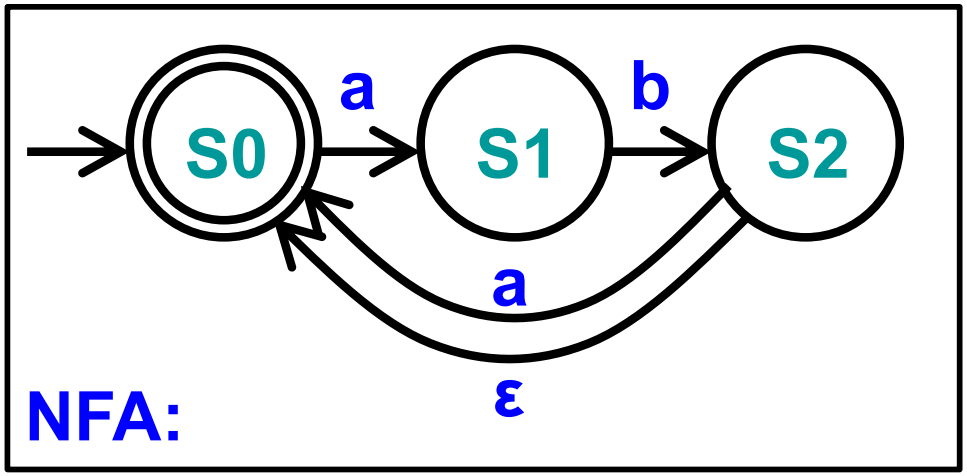

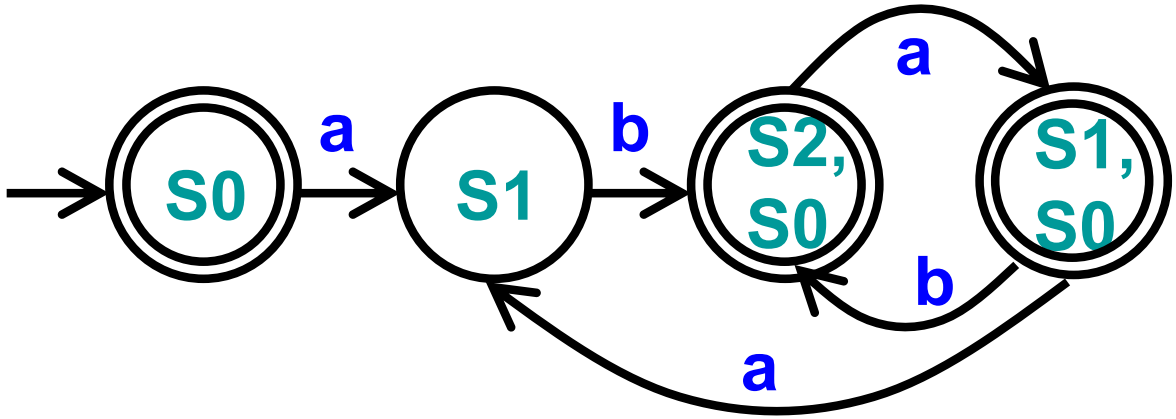

NFA → DFA Example 3

- NFA

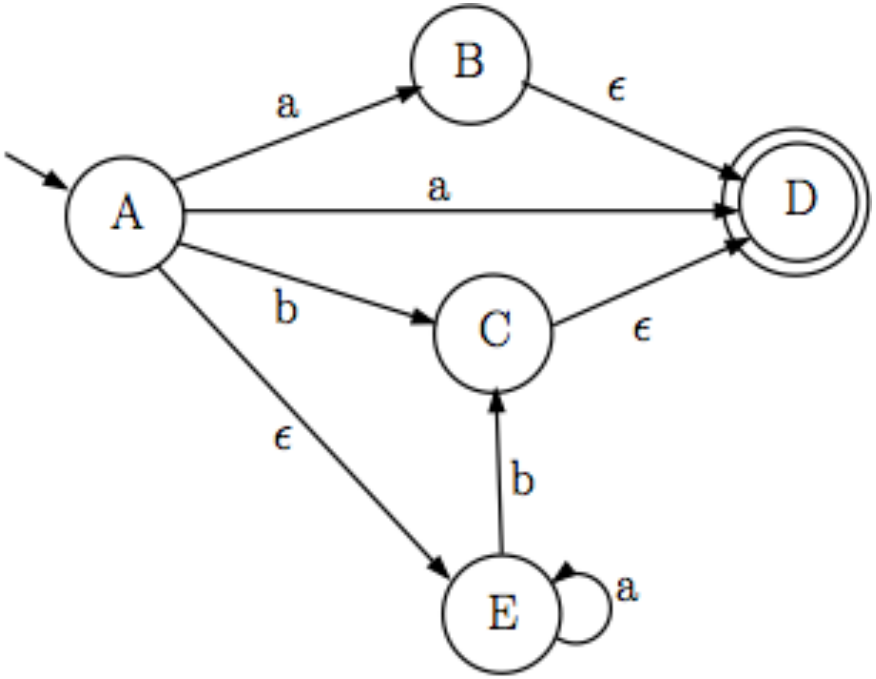

- DFA

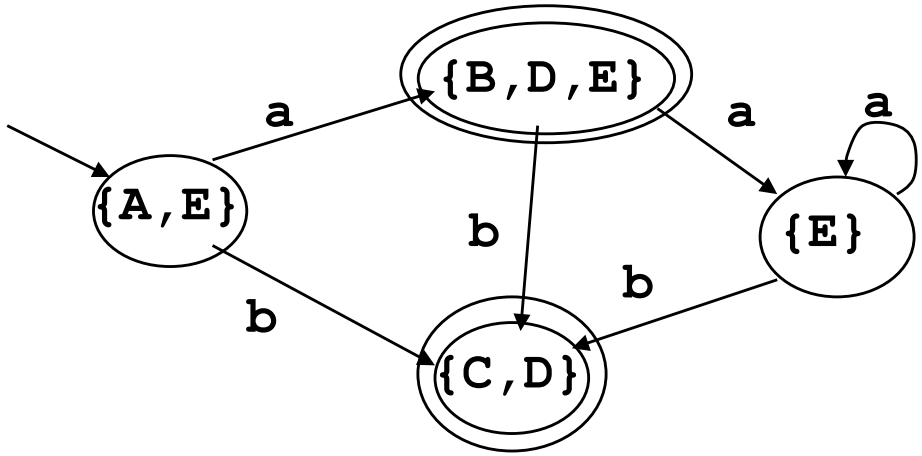

R = { {A,E}, {B,D,E}, {C,D}, {E} }

NFA → DFA Practice

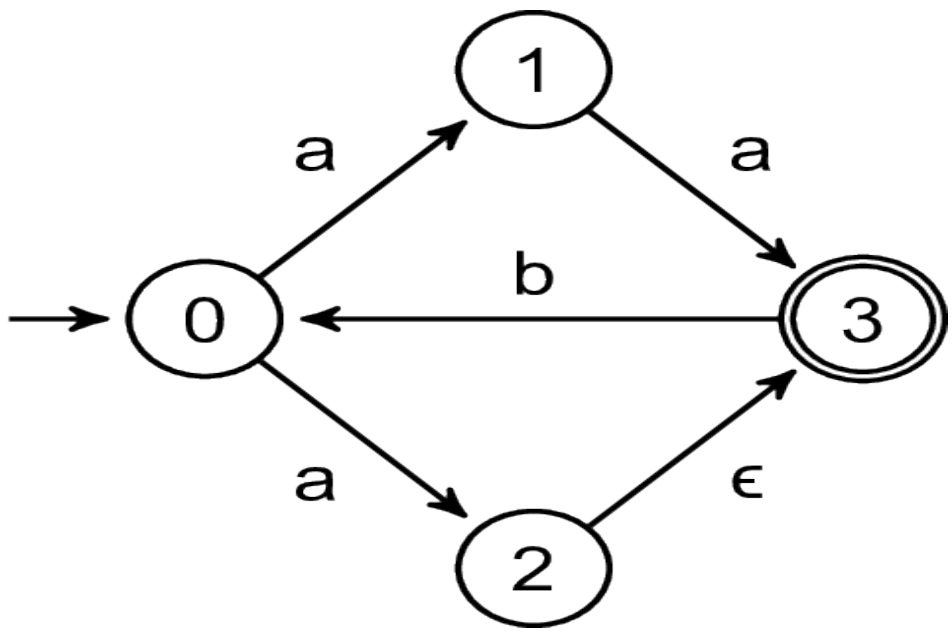

NFA → DFA Practice

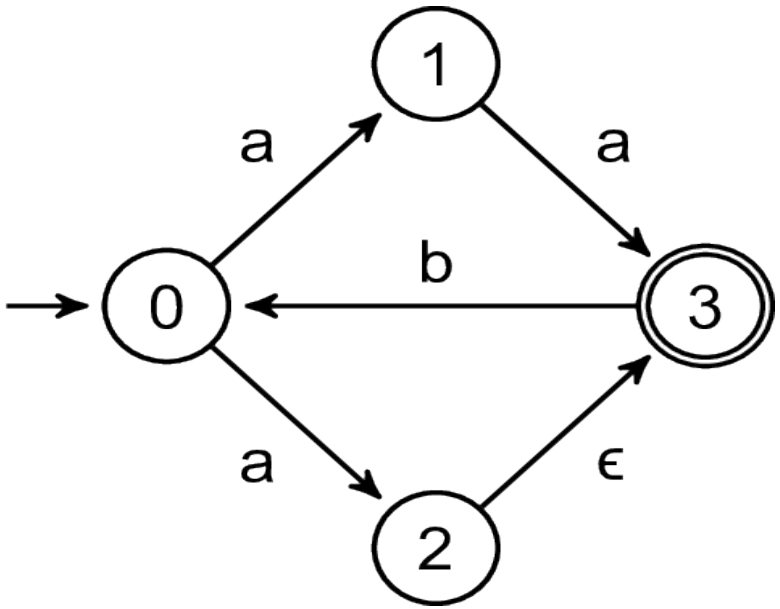

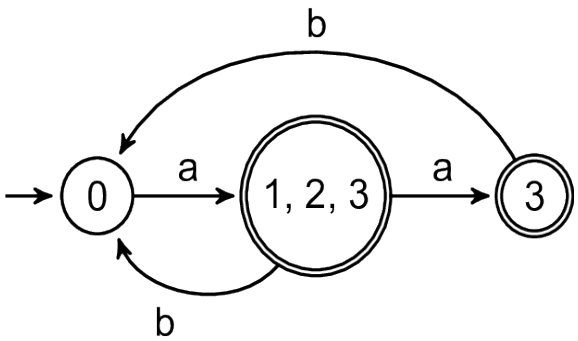

Analyzing the reduction

- Any string from {A} to either {D} or {CD}
  - Represents a path from A to D in the original NFA

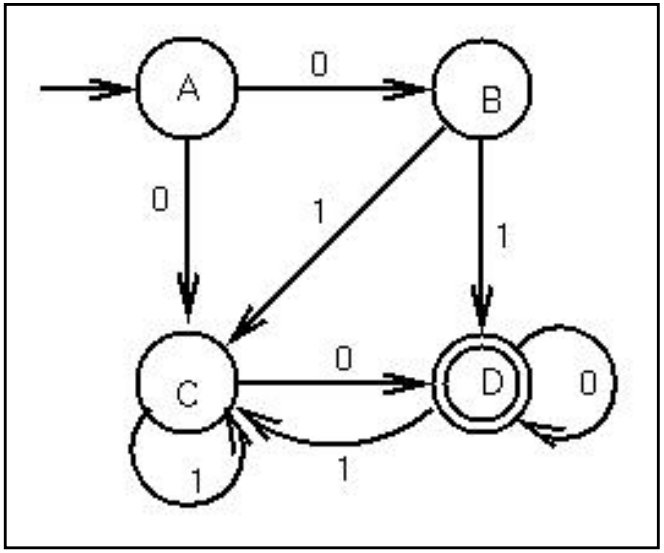

NFA

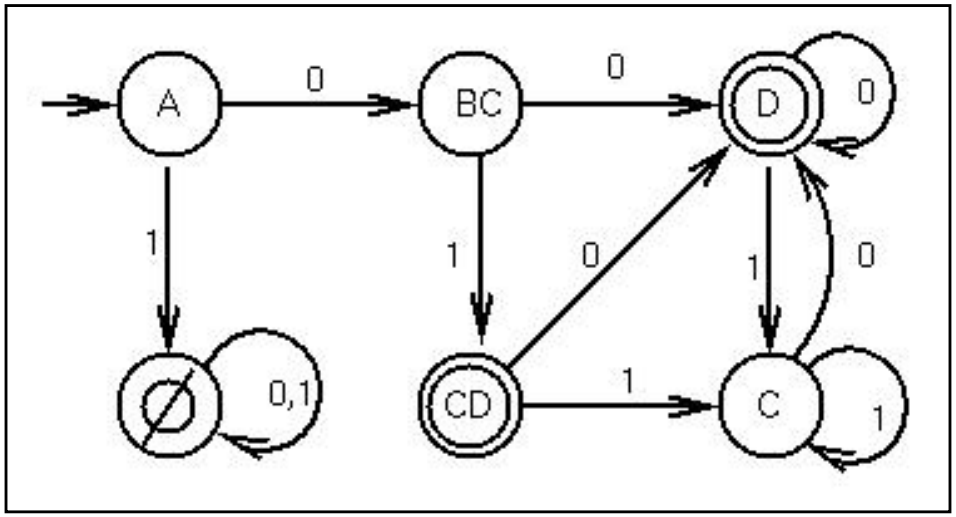

DFA

Analyzing the Reduction

- Can reduce any NFA to a DFA using subset alg.
- How many states in the DFA?
  - Each DFA state is a subset of the set of NFA states
  - Given NFA with n states, DFA may have 2^n states
    - Since a set with n items may have 2^n subsets
  - Corollary
    - Reducing a NFA with n states may be $O(2^n)$

Reducing DFA to RE

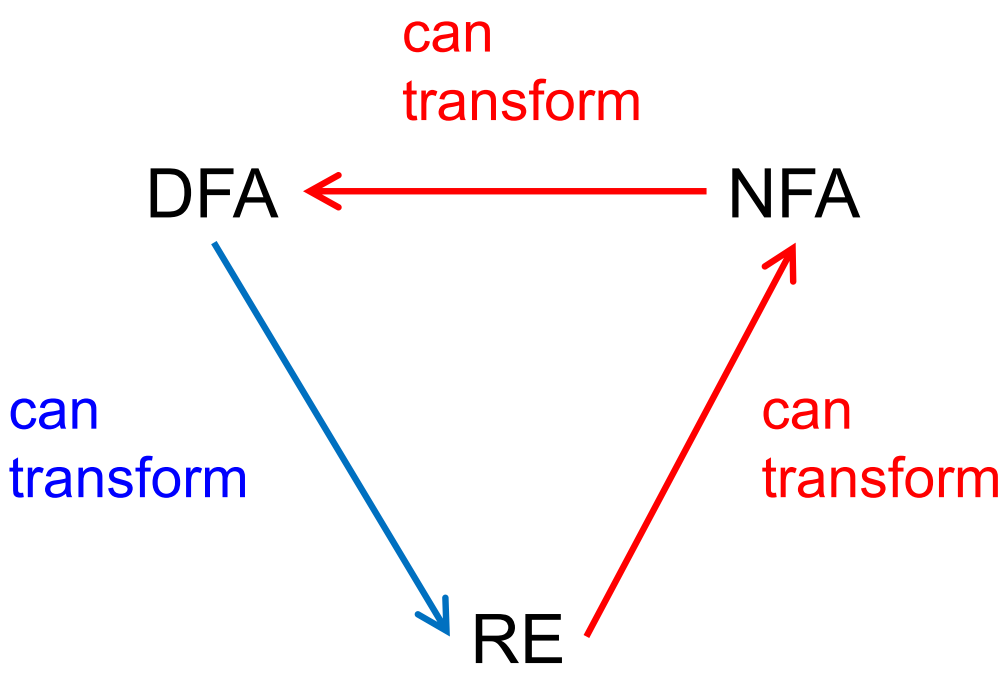

Reducing DFAs to REs

- General idea
  - Remove states one by one, labeling transitions with regular expressions
  - When two states are left (start and final), the transition label is the regular expression for the DFA

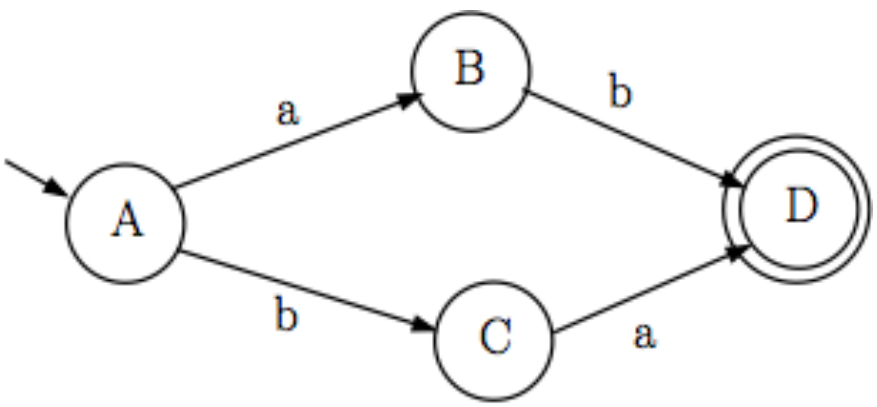

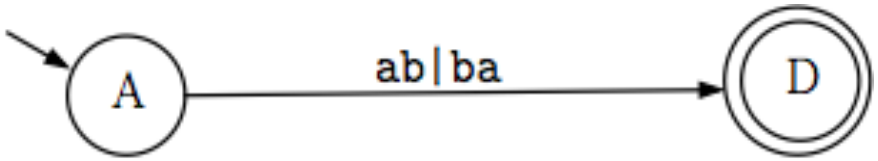

DFA to RE example

Language over $\Sigma = \{0,1\}$ such that every string is a multiple of 3 in binary

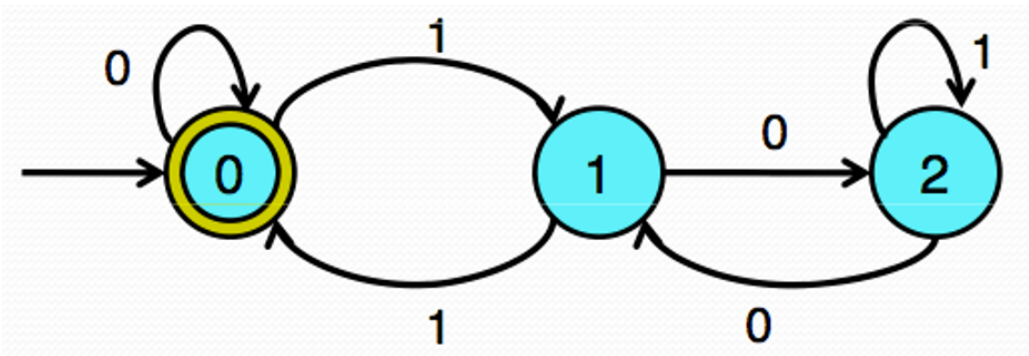

DFA to RE example

Language over $\Sigma = \{0,1\}$ such that every string is a multiple of 3 in binary

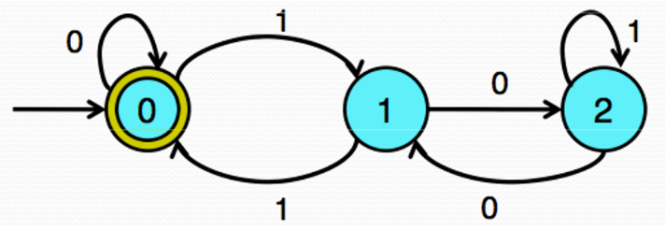

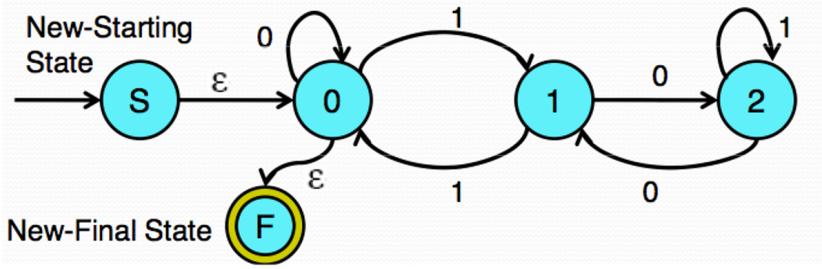

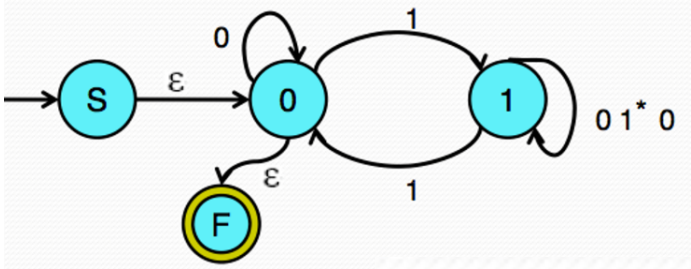

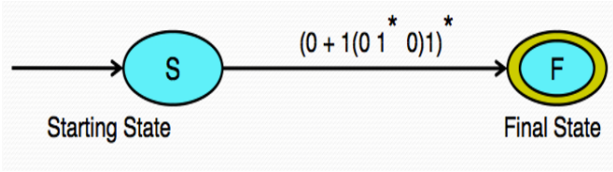

$$(0 + 1(0\,1^{*}\,0)1)^{*}$$

Other Topics

- Minimizing DFA
  - Hopcroft reduction
- Complementing DFA
- Implementing DFA

Minimizing DFAs

- Every regular language is recognizable by a unique minimum-state DFA
  - Ignoring the particular names of states
- In other words
  - For every DFA, there is a unique DFA with minimum number of states that accepts the same language

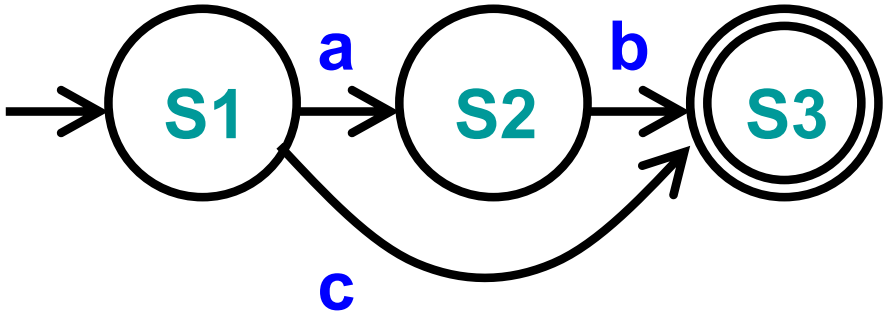

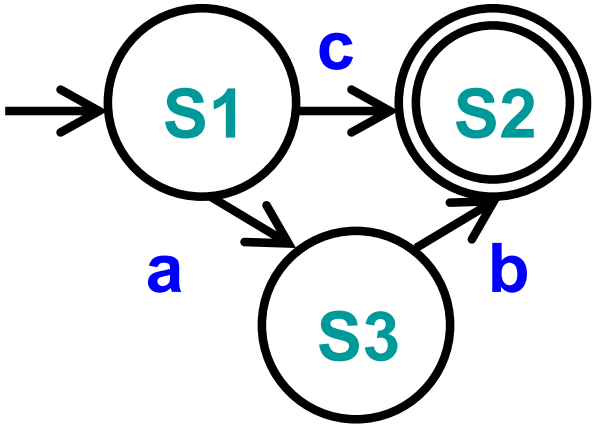

J. Hopcroft, "An n log n algorithm for minimizing states in a finite automaton," 1971

Minimizing DFA: Hopcroft Reduction

- Intuition
  - Look to distinguish states from each other
    - End up in different accept / non-accept state with identical input
- Algorithm
  - Construct initial partition
    - Accepting & non-accepting states
  - Iteratively split partitions (until partitions remain fixed)
    - Split a partition if **members in partition have transitions to different partitions for same input**
      - Two states x, y belong in same partition if and only if for all symbols in Σ they transition to the same partition
  - Update transitions & remove dead states

Splitting Partitions

- No need to split partition {S,T,U,V}
  - All transitions on a lead to identical partition P2
  - Even though transitions on a lead to different states

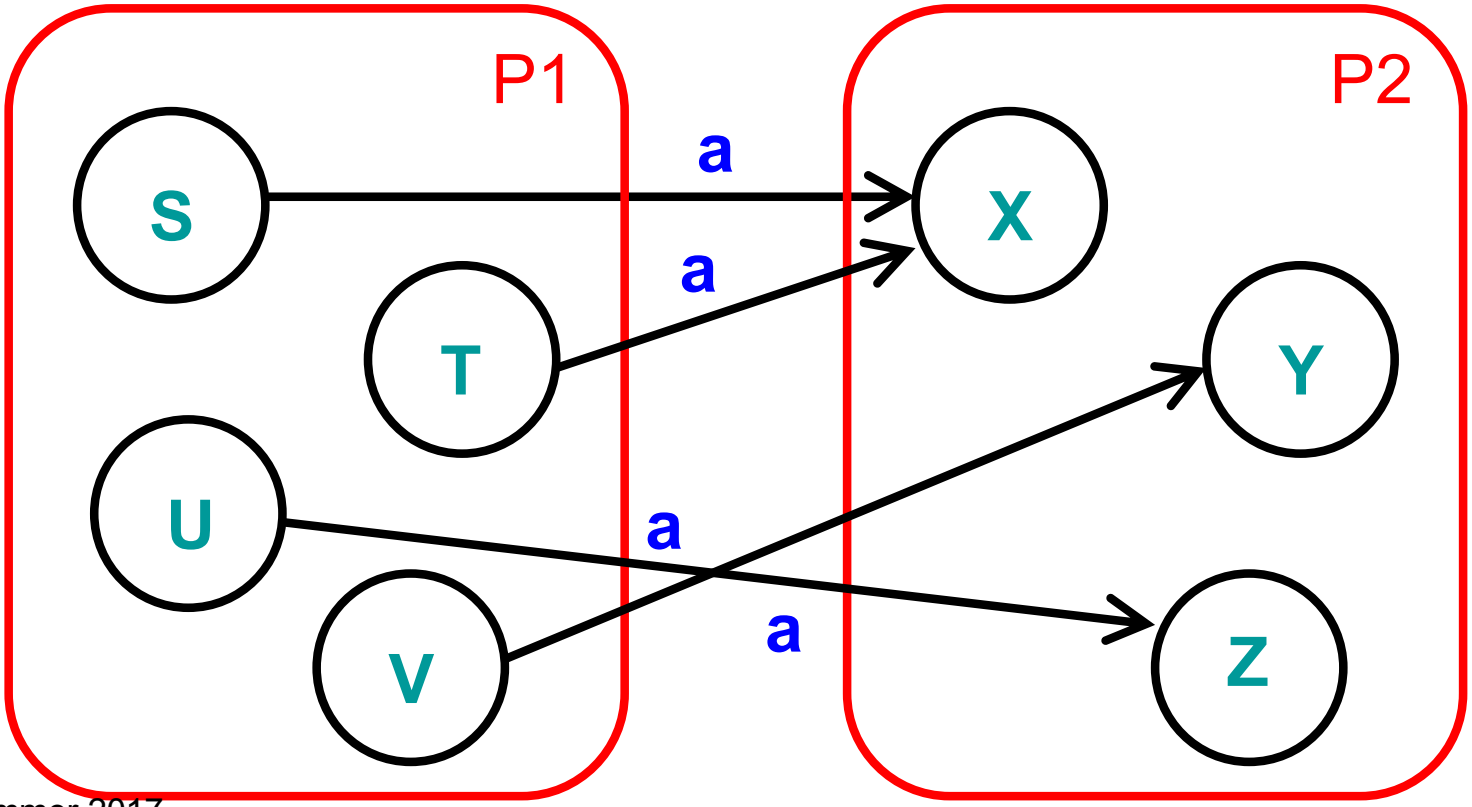

Splitting Partitions (cont.)

- Need to split partition {S,T,U} into {S,T}, {U}
  - Transitions on a from S,T lead to partition P2
  - Transition on a from U lead to partition P3

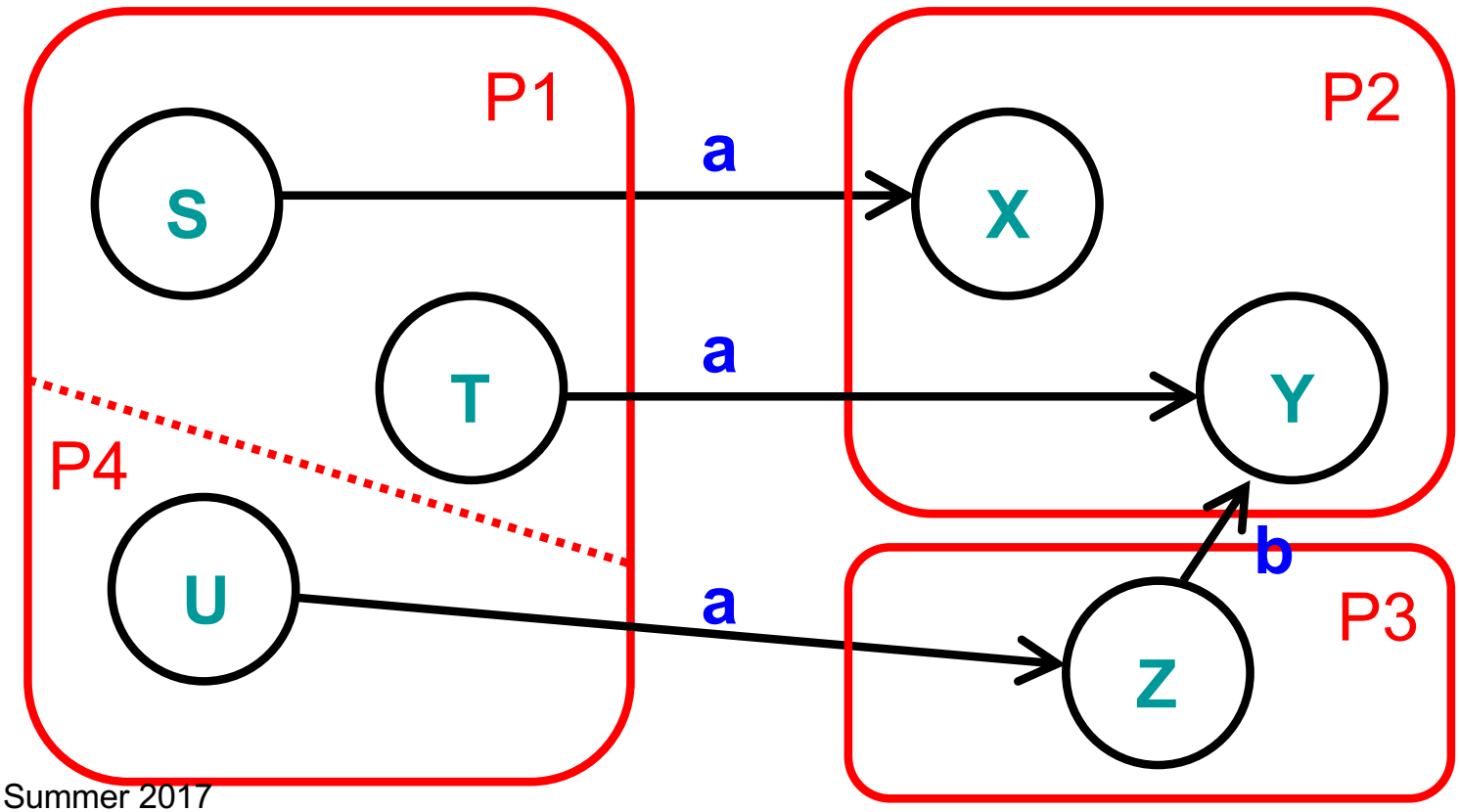

Resplitting Partitions

- Need to reexamine partitions after splits
  - Initially no need to split partition {S,T,U}
  - After splitting partition {X,Y} into {X}, {Y} we need to split partition {S,T,U} into {S,T}, {U}

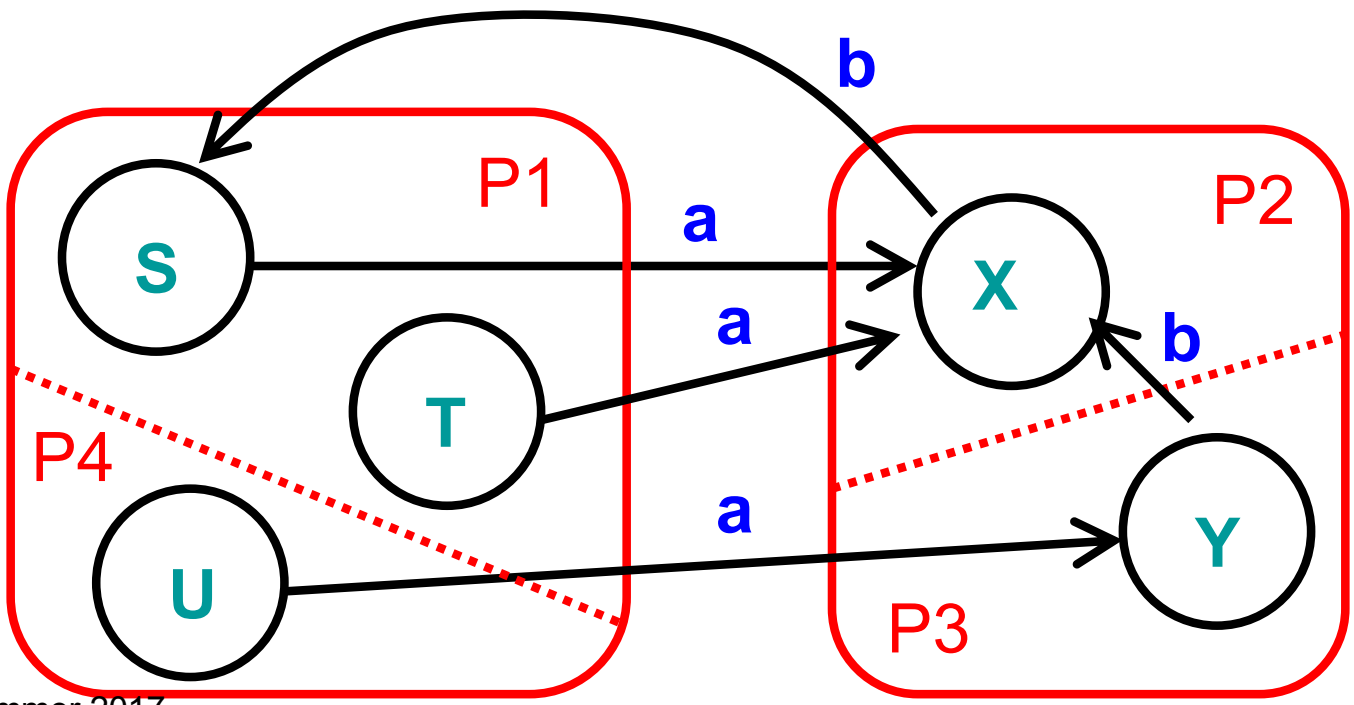

Minimizing DFA: Example 1

- DFA

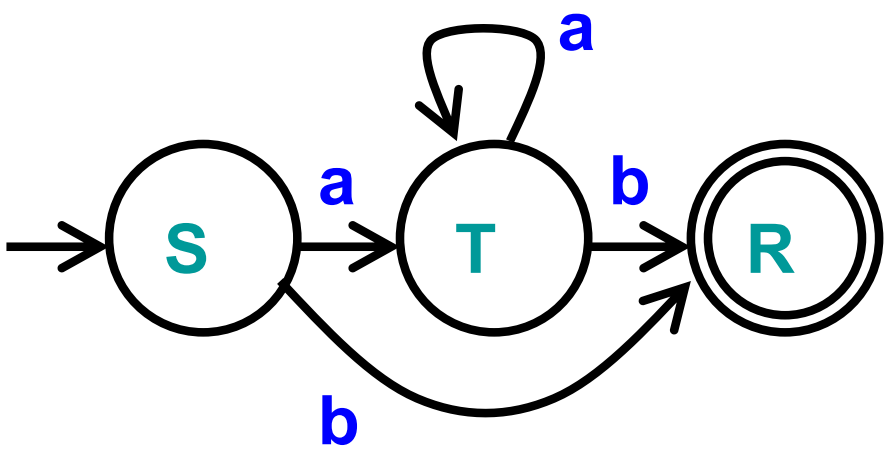

- Initial partitions

- Split partition

Minimizing DFA: Example 1

- DFA

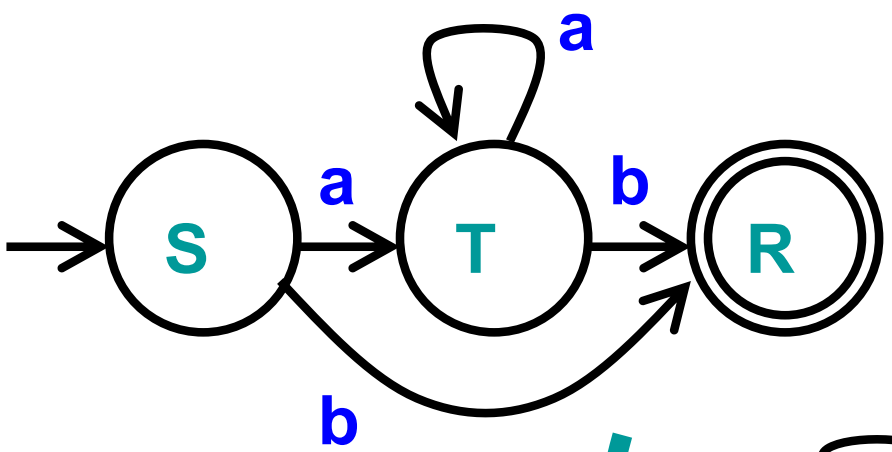

- Initial partitions
  - Accept { R } = P1
  - Reject { S, T } = P2

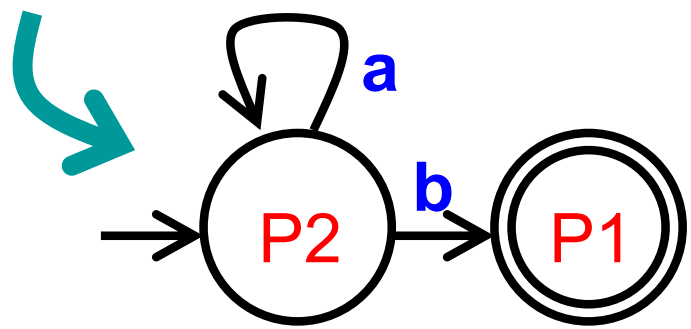

- Split partition? → Not required, minimization done
  - move(S,a) = T ∈ P2 – move(S,b) = R ∈ P1
  - move(T,a) = T ∈ P2 – move (T,b) = R ∈ P1

Minimizing DFA: Example 2

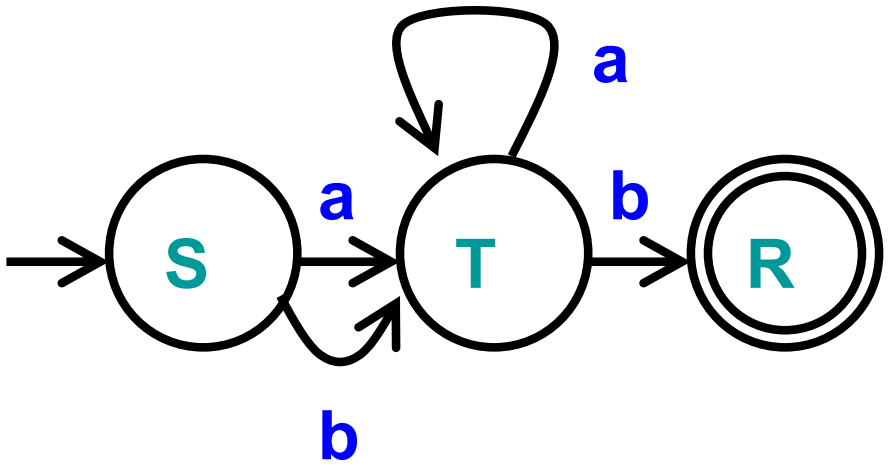

Minimizing DFA: Example 2

- DFA

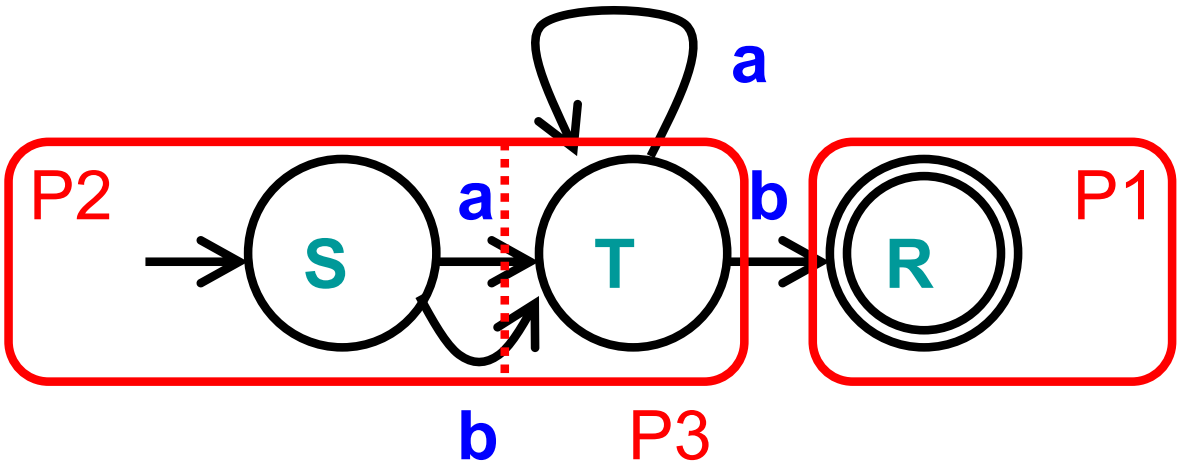

DFA already minimal

- Initial partitions
  - Accept { R } = P1
  - Reject { S, T } = P2
- Split partition? → Yes, different partitions for B
  - move(S,a) = T ∈ P2 – move(S,b) = T ∈ P2
  - move(T,a) = T ∈ P2 – move (T,b) = R ∈ P1

Minimizing DFA: Example 3

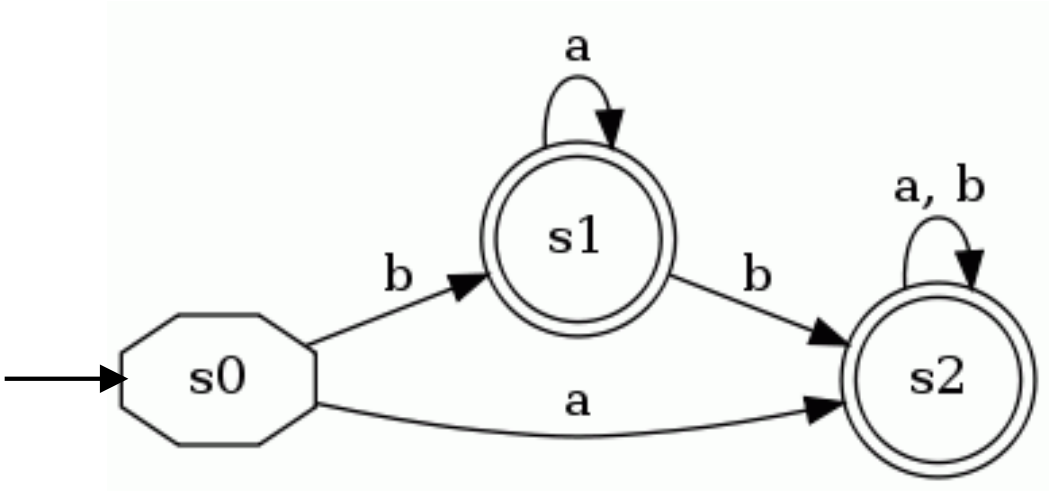

Minimizing DFA: Example 3

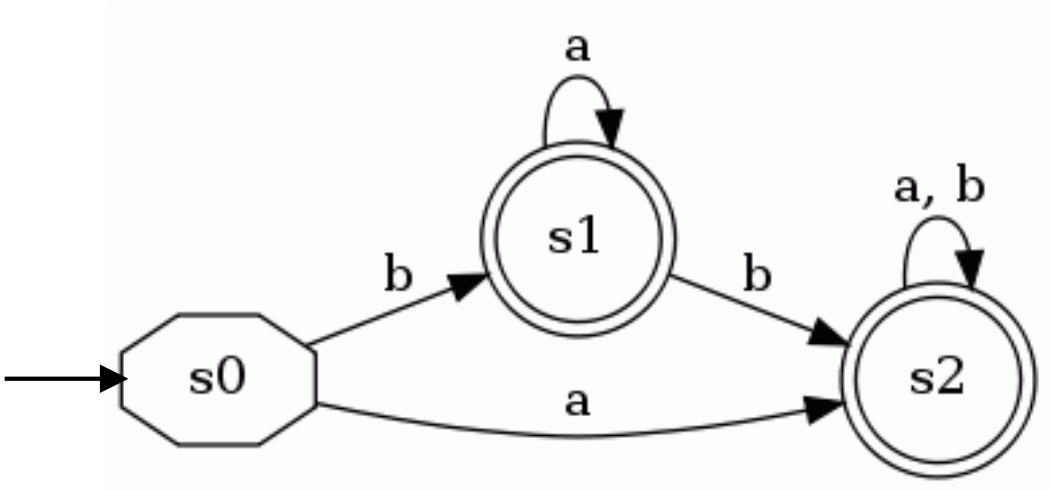

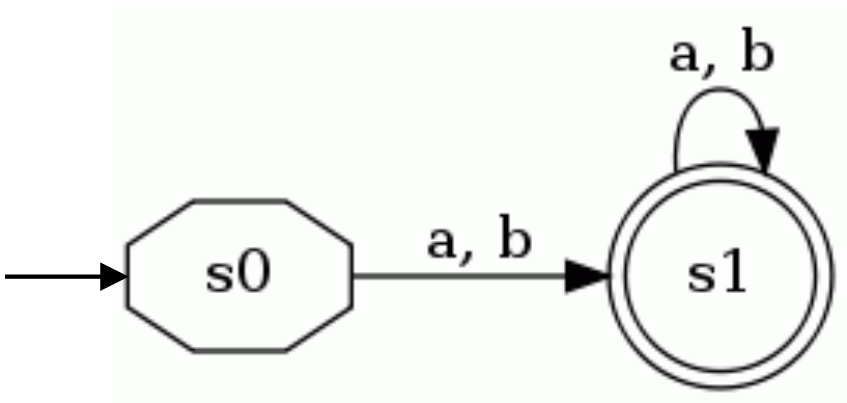

Complement of DFA

- Given a DFA accepting language L
  - How can we create a DFA accepting its complement?
  - Example DFA
    - $\Sigma = \{a,b\}$

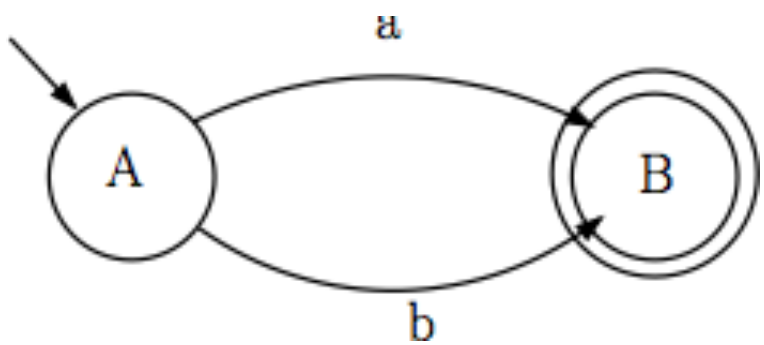

Complement of DFA

- Algorithm
  - Add explicit transitions to a dead state
  - Change every accepting state to a non-accepting state & every non-accepting state to an accepting state
- Note this only works with DFAs
  - Why not with NFAs?

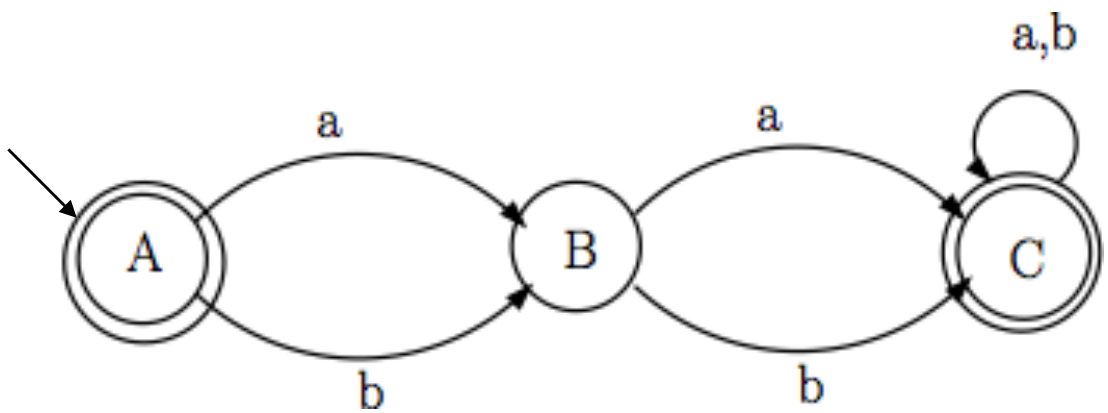

Implementing DFAs (one-off)

It's easy to build a program which mimics a DFA

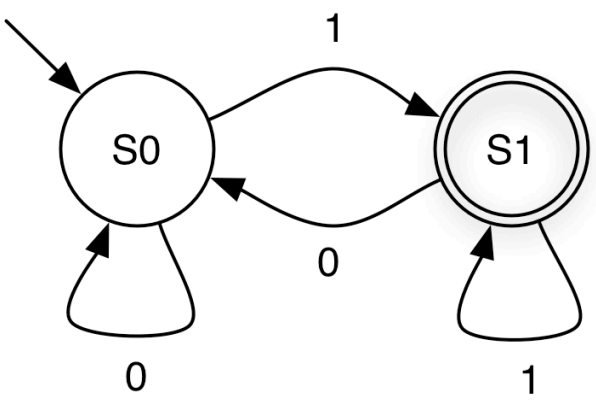


```
cur_state = 0;
while (1) {

  symbol = getchar();

  switch (cur_state) {

    case 0: switch (symbol) {
              case '0':  cur_state = 0; break;
              case '1':  cur_state = 1; break;
              case '\n': printf("rejected\n"); return 0;
              default:   printf("rejected\n"); return 0;
            }
            break;

    case 1: switch (symbol) {
              case '0':  cur_state = 0; break;
              case '1':  cur_state = 1; break;
              case '\n': printf("accepted\n"); return 1;
              default:   printf("rejected\n"); return 0;
            }
            break;

    default: printf("unknown state; I'm confused\n");
             break;
  }
}
```

Implementing DFAs (generic)

More generally, use generic table-driven DFA

```
given components (Σ, Q, q0, F, δ) of a DFA:
let q = q0
while (there exists another symbol s of the input string)
    q := δ(q, s);
if q ∈ F then
    accept
else reject
```

- q is just an integer
- Represent δ using arrays or hash tables
- Represent F as a set

Running Time of DFA

- How long for DFA to decide to accept/reject string s?
  - Assume we can compute $\delta(q, c)$ in constant time
  - Then time to process s is $O(|s|)$
    - Can't get much faster!
- Constructing DFA for RE A may take $O(2^{|A|})$ time
  - But usually not the case in practice
- So there's the initial overhead
  - But then processing strings is fast

Regular Expressions in Practice

- Regular expressions are typically "compiled" into tables for the generic algorithm
  - Can think of this as a simple byte code interpreter
  - But really just a representation of $(\Sigma, Q_A, q_A, \{f_A\}, \delta_A)$, the components of the DFA produced from the RE
- Regular expression implementations often have extra constructs that are non-regular
  - I.e., can accept more than the regular languages
  - Can be useful in certain cases
  - Disadvantages
    - Nonstandard, plus can have higher complexity

Summary of Regular Expression Theory

- Finite automata
  - DFA, NFA
- Equivalence of RE, NFA, DFA
  - RE → NFA
    - Concatenation, union, closure
  - NFA → DFA
    - ε-closure & subset algorithm
- DFA
  - Minimization, complement
  - Implementation