Domain Wall Memory Management

Kirk Pruhs
University of Pittsburgh

Coauthors: Neil Olver, Kevin Schewior, Rene Sitters and Leen Stougie.




Memory Technologies

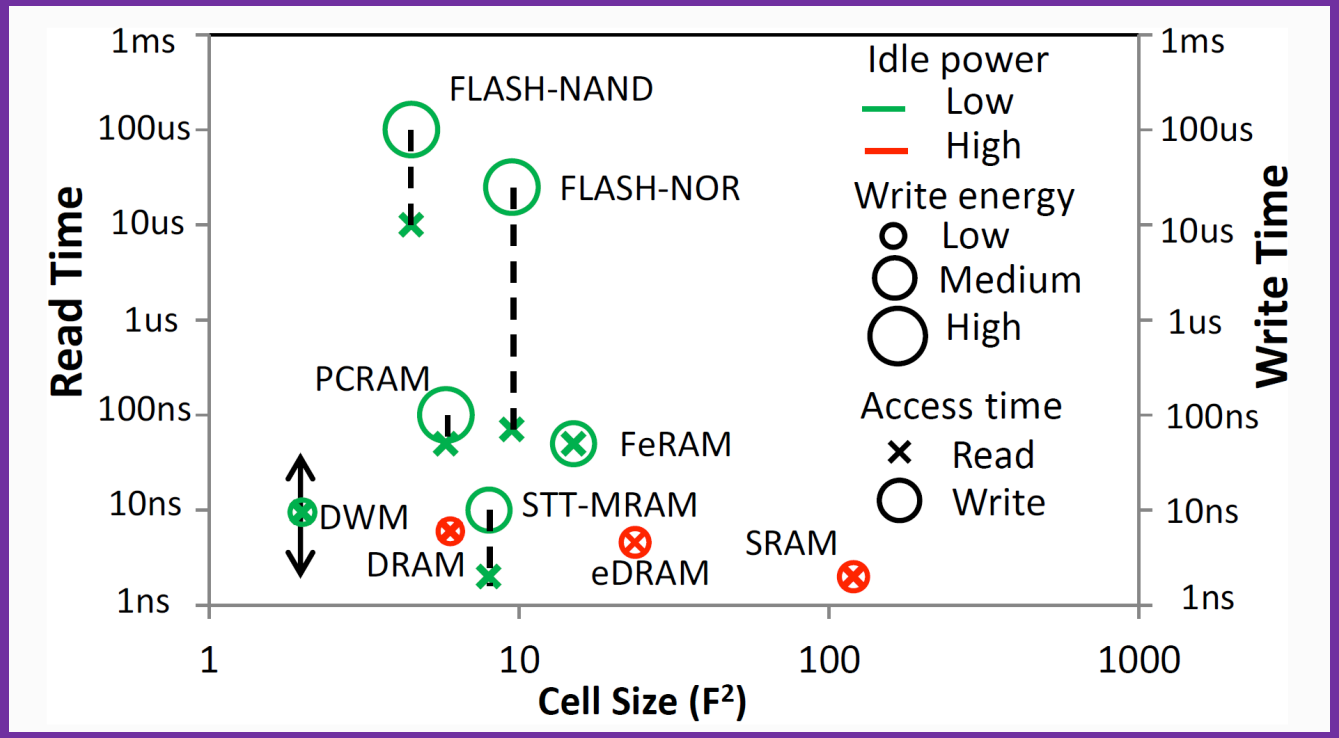

Science 2008

DWM = Domain Wall Memory
= Racetrack Memory

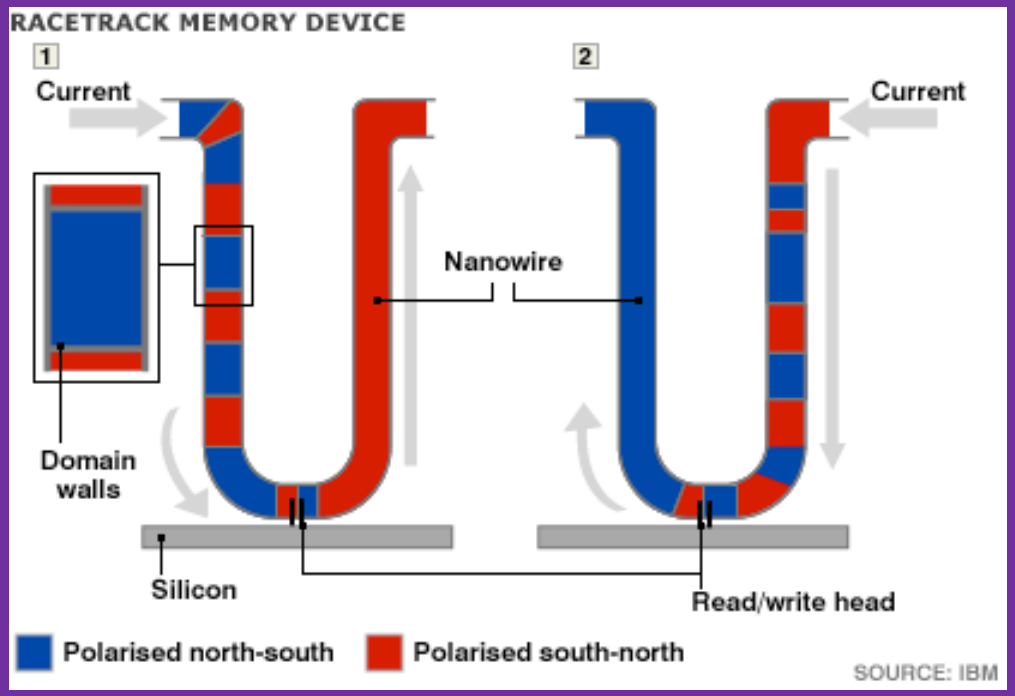

- Nickel-iron alloy wires 1-10 microns (millionth of a meter) in length
- Data held in domain walls between regions of different polarization
- 10 microns length could hold 100 domain walls
- Data is written or read by read/write head on silicon base
- Relevant domain wall shunted to read/write head by applying charge
- Reversing charge moves domain walls back

Theoretical View:
DWM = tape with read/write head(s)

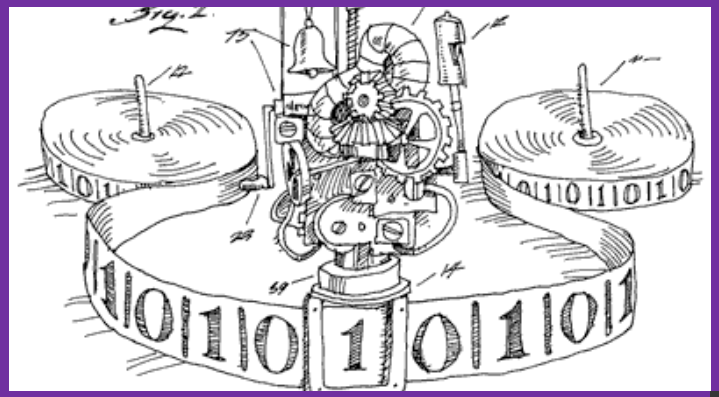

Offline Static Track Management Problem

- Input: sequence of items (virtual memory addresses)
  - e.g. A, B, A, C, A, B, D, A
- Feasible solution: permutation of the n items representing the mapping from virtual memory to physical memory
- Objective: Minimize the total (or average) distance the tape head has to move to access these items in this order

Example:

- Input: A, B, C, A, B, D
- Feasible solution:

B	**A**	**D**	**C**

- A $\Rightarrow$ B cost 1
- B $\Rightarrow$ C cost 3
- C $\Rightarrow$ A cost 2
- A $\Rightarrow$ B cost 1
- B $\Rightarrow$ D cost 2
- Total cost of this assignment = 1 + 3 + 2 + 1 = 7

Static Track Management
aka Minimum Linear Arrangement (MLA)

- Track management input: A, B, C, A, B, D

- Minimum linear arrangement input = access graph

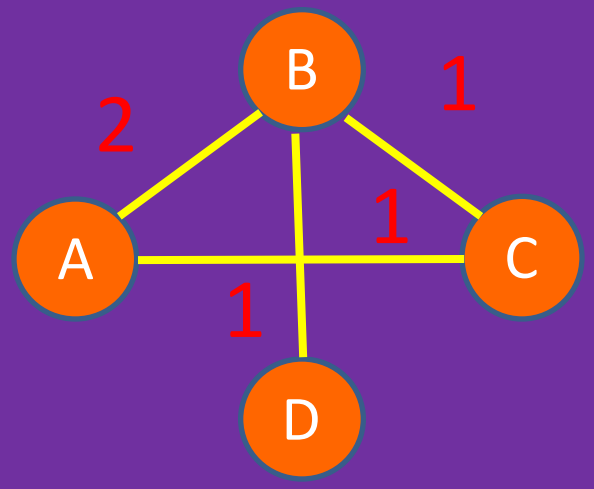

Known Results for MLA /Static Track Management

- NP-hard
- Poly-time $O(\log^2 n)$ approximation [Hansen 1989]
- Poly-time $O(\log n \log \log n)$ approximation [CHKR 2006, FL 2007]
- No PTAS under complexity theoretic assumptions [AMS2011]

Rest of the Talk

- Hansen's algorithm and analysis for static track management
- Introduction to dynamic track management
- Issues with extending Hansen's algorithm to dynamic track management
- How we overcome these issues

Hansen's Algorithm Design

- Root Problem: Determine which items L are on the left and which items R should go on the right with the objective of minimize number of consecutive accesses that cross the boundary

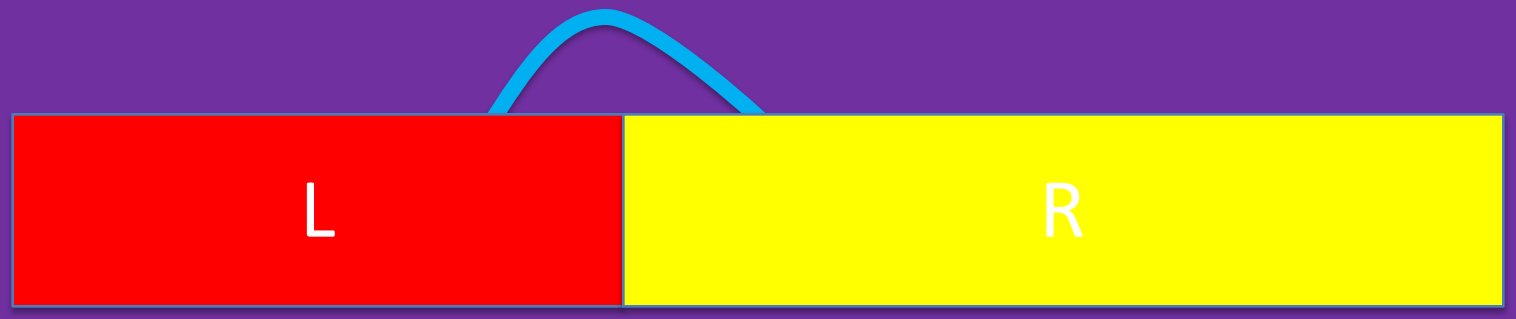

- Recurse on L
- Recurse on R

Dynamic Track Management

- Root Problem: Determine which items L are on the left and which items R should go on the right with the objective of minimize number of access that cross the boundary

- Question: A c-approximation for Root Problem yields ?-approximation algorithm for MLA?

Hansen's Algorithm Analysis

- Question: A c-approximation for Root Problem yields ?-approximation algorithm for MLA?

- Issue: Optimal may put very different items on the left and right.

Hansen's Algorithm Analysis

- Theorem: A c-approximation for the Root Problem yields a O(c * log n)-approximation for MLA.
- Proof:
  - Lemma: Each instance I of MLA has the following
    - Subadditivity Property: for all partitions L and R of I, Opt(I) ≥ Opt(L) + Opt(R)
  - Lemma: Subadditivity and c-approximation for the Root Problem imply approximation c* (height of recursion)

Dynamic Track Management

- Everything the same as static track management except that the possible operations are:
  - Move head one position left or right
  - Swap current items with the item to the left or the right

- Comment: Potentially beneficial if working set changes

Issues with Applying Hansen's Algorithm for Dynamic Track Management

1. Straight-forward recursion can't work
   - Items can enter and exit in recursive subproblems

2. Determining a solvable base problem
   - Analogous to finding balanced cut of the access graph in MLA

3. Finding something analogous to the subaddivity property in the MLA analysis
   - Not clear what subaddivity should mean
   - For most obvious candidates, not clear it holds

Dealing With Lack of Subadditivity

- Identify subcollection of cost that are subadditive
- Base algorithm is good approximation for subadditive costs
- Subadditive costs are a large portion of the total cost

- Base problem = per time balanced cuts on time indexed graph with
  - Vertices for each (item, time) pair
  - Consistency Edges: An edge between two vertices with the same item with consecutive times
  - Request edges: An edge of the form ((A, t), (B, t)) if item A as accessed at time t-1 and item B was accessed at time t
  - Example of time indexed graph for input sequence C, B, A, C, B shown

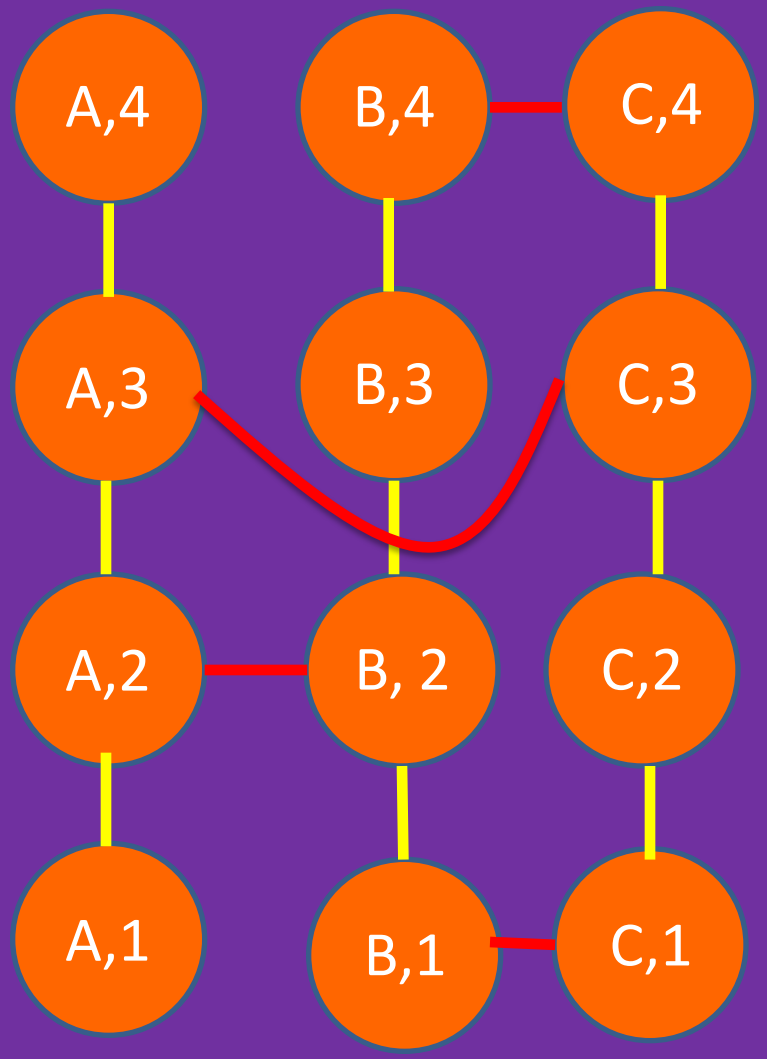

Illustration of Laminar Family of Balanced Cuts

- Parent in orange
- Here parent has 6 children in laminar family
- Yellow edges = not counted in subadditive costs

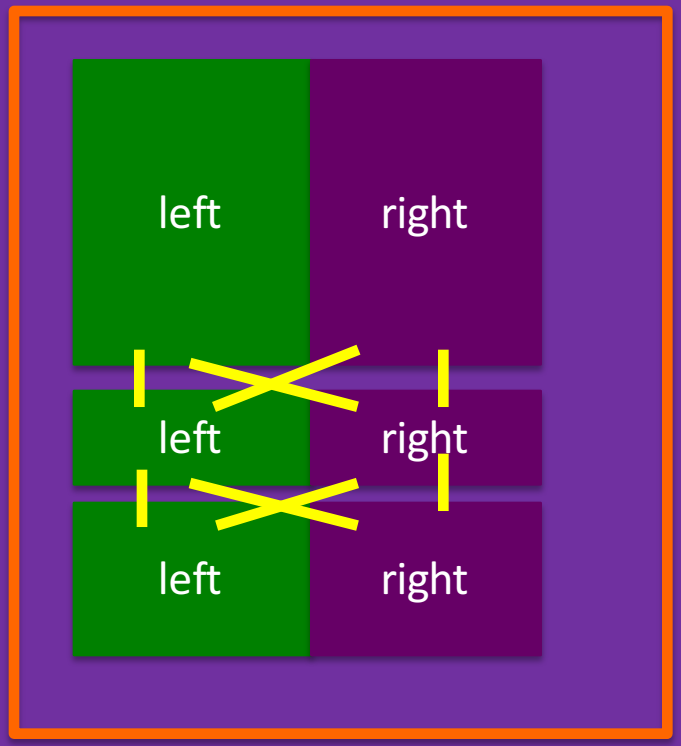

Dynamic Min Balanced Cut

- Obvious open problem: Find a poly-log competitive online algorithm for dynamic track management

- We have an $\Omega(\log n)$ general lower bound on competitiveness of any online algorithm

Core Online Problem

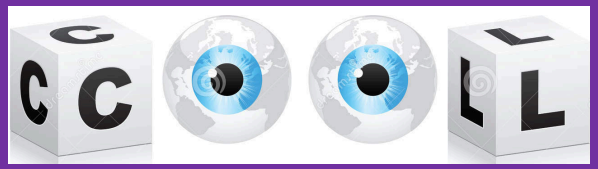

- Setting
  - You have a collection of items
  - You must maintain a partition of the items into two halves
- Input that arrives over time: Pair (x_t, y_t) arrive at time t
- Costs: 1 if items x_t and y_t are in different halves
- Algorithmic decision: Can swap items between halves at a cost of 1 per swap
- Objective: Minimize total cost

Thanks for Listening!
Any Questions?